ACTA LOGISTICA MORAVICA

PERIODICKÝ INTERNETOVÝ ČASOPIS V OBORU LOGISTIKY

ROČNÍK 8, ČÍSLO 1, 2018p, ISSN 1804 - 8315

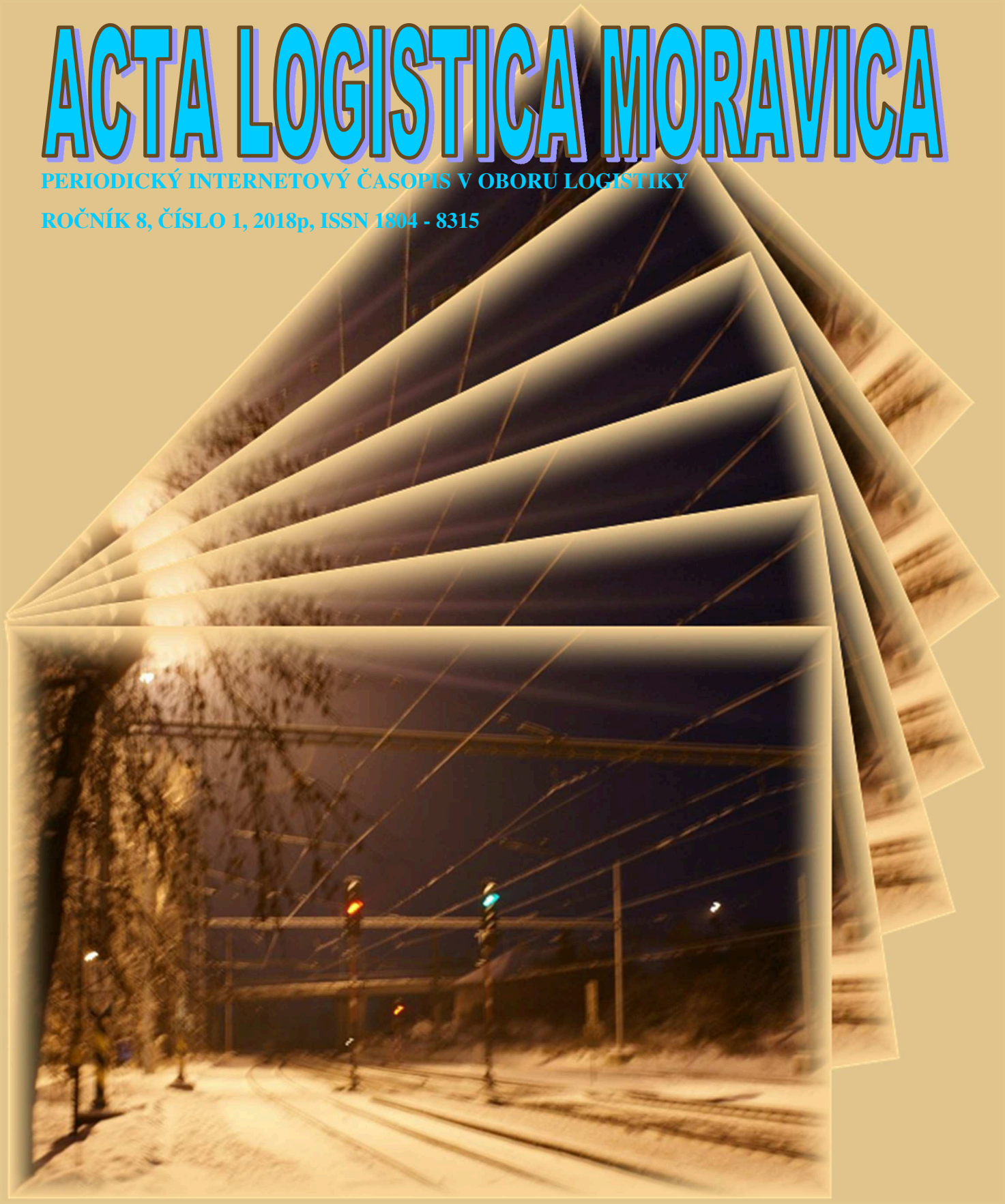

Vysoká škola logistiky o.p.s.

aktuální číslo elektronického časopisu Acta Logistica Moravica obsahuje i příspěvky přednesené na konferenci Pokrokové metody v logistice

4. ročník konference Pokrokové metody v logistice se konal pod záštitou rektora VŠLG dne 5. 4. 2018 v prostorách Vysoké školy logistiky o.p.s. v Přerově

CONTENT

PROVIDING PUBLIC SERVICES IN THE CITY OF PŘEROV

POSKYTOVÁNÍ VEŘEJNÝCH SLUŽEB VE MĚSTĚ PŘEROV

Ing. et Ing. Dočkalíková Iveta, Ph.D.

Department of Bachelor Studies
College of Logistics
e-mail: iveta.dockalikova@vslg.cz

Mgr. Ludmila Floková

Department of Bachelor Studies
College of Logistics
e-mail: ludmila.flokova@vslg.cz

Bc. Martina Vavrečková

Meopta-optika s.r.o.
e-mail: VavreMa@vslg.cz

Abstract

Problems in general economic interest services are still in the forefront of political debates in the European Union countries. Issues how to ensure high-quality and accessible services of public interest and general economic services especially are still being opened. Municipality waste management is a set of services by which municipalities/towns/ cities ensure primarily waste disposal and keep the area clean. It is obvious that along with rising demands for quality of waste management which are related to legislation requirements and technical progress in this field the range of this services is also growing. The aim of this article is to show the contemporary state of such services on the example of Přerov city on the basis of available data and suggest its improvement.

Abstrakt

Problematika služeb v obecném hospodářském zájmu stojí stále v popředí zájmu politických debat na úrovni Evropské unie. Neustále se otevírají otázky, jak zajistit kvalitní a dostupné služby v obecném zájmu, zejména pak služby v obecném hospodářském zájmu. Odpadové hospodářství obcí je souborem služeb, kterými obce/města primárně zajišťují odvoz odpadů a udržují čistotu na svém území. Je zřejmé, že spolu s rostoucími nároky na kvalitu nakládání s odpady, které souvisejí s legislativními požadavky a technickým vývojem v dané oblasti, narůstá také rozsah těchto služeb. Cílem tohoto článku je ukázat na příkladu města Olomouckého kraje na základě dostupných dat současný stav poskytované služby a navrhnout její eventuální zlepšení.

Key words

waste management, disposal expenses, public services

Klíčová slova

odpadové hospodářství, výdaje na nakládání s odpady, veřejné služby

INTRODUCTION

Nowadays, the question about the relation with economic growth and environmental protection in each given country is getting more topical. The impact of environmental politics on individual regions and impact of environmental politics on both economic growth and also other economic indicators such as unemployment, inflation, business in the region etc. and living standard generally is the matter of the conversation.

The article deals with providing the public services in the city of Přerov especially services in waste management such as assembling, collection, transportation, sorting, recycling and disposal of municipal waste in the area of Přerov city in the period 2013 – 2015. This service in the Přerov city is provided by Technické služby města Přerov ltd., where the city of Přerov is a major owner.

Even if responsibilities about waste management for municipalities are specified by a legislative framework extend and method of its fulfilment are limited by a financial capability of municipalities and so the economic factor is one of the most important decision factors. Furthermore efficiency measurement of public expenses is very problematic especially in the field of environmental protection. Particularly quantification of the environment changes is very specific and it is difficult to determine a correlation between growing expenses in protection of certain environmental parts and rising quality of the whole environment.

Such services are counted among services in general economic interest (public services). Services related with the waste management belong among services, which municipalities are obligated to ensure for their inhabitants as an originator and in the Czech Republic are governed by Act. No. 185/2001 Coll. on waste as amended and also Act No. 477/2001 Coll. on packaging as amended and following Plan for Waste Management in the Czech Republic and related plans for individual municipalities.

1 PUBLIC SEREVICES – WASTE MANAGEMENT

Public services are comprehended as the kind of services for public use and which are controlled by government administration. The general aim of providing services is fulfilment of public demands with keeping subsidiarity principles [1].

Ministry of the Environment defines waste management as follows: “Waste management means activities: waste prevention, disposal with waste, aftercare of the place where waste is stored and control. Waste management is a dynamically evolving field of the national economy. Industrially and economically advanced countries have begun to deal intensively with waste management in the 80s of the last century [2].

This is related with determining the Waste Management Plan in the Czech Republic which is followed up with plans of individual regions and municipalities. The Waste Management Plan (WMP) is a tool for managing the waste management and related strategies. Based on Directive 2008/98 / EC of the European Parliament and of the Council it is incumbent upon the Czech Republic to establish such plan. Its aims are especially preventing waste generation and increase of recycling and material use of waste.

Municipal waste is commonly understood as all waste which is generated within the area of the municipality by individualities and also all waste generated while cleaning public

communications and grounds, maintenance of parks and public greenery including cemeteries.

The main public waste handling procedures are collection, recycling, combustion and dumping. Nowadays, the most commonly used is waste dumping. However, based on the resolution of the European Parliament there should be a change occurred in the waste management procedures hierarchy by the year 2025 according to 3Rs strategy. 3Rs stands for reduce, reuse and recycle. This means that on the first place there should be waste minimisation, reducing waste generation, after this its reuse, then recycling finally followed by waste-to-energy process.

Assembling and collection of the waste is realised by individual municipalities. In most cases the waste handling procedures are intrusted to subjects established by municipality or where the municipality are shareholders or major owners.

2 FUNDING METHODS

The generally binding decree of the each individual municipality can determine the charge for the municipal waste handling only in one of three possible ways because the combination of payment is not possible (see Section 17 (5) and Section 17a (1) of Act No. 185/2001 Coll. on Waste, as amended). Two types of methods below are defined by the Waste Act and the third is amended by Act No. 565/1990 Coll., on Local Charges, as amended. The decision on the method of payment is entirely within the competence of the municipality as well as the amount of the charge.

Methods of payment for municipal waste:

1. A charge for assembling, collection, transportation, sorting, reusing and disposal – it is concerned as so called contractual charge or a payment for the above service according to Section 17 (5) of the Waste Act. Such contract has to be concluded only in writing and has to include the amount of payment. All other requisites of the contract are based on the Civil Act.
2. A charge for operation of system for assembling, collection, transportation, sorting, reusing and disposal - it is so called "local fee". Upper limit is specified by law with this method of payment, i. e. 1,000 CZK per person per calendar year. This method is the most widely used in the Czech Republic. The Provision Section 14 (2) of the Act on Local Fees allows the municipality to exempt certain category of people or to lower the charge.
3. A charge for municipal waste – it is regulated by the Waste Act (Section 17a). The municipality can establish it by a generally binding decree, manages this charge as is its recipient.
4. Establishment of local fees is set up by an autonomous jurisdiction by a generally binding decree (GBD) pursuant to the provisions of Section 14 of Act No. 565/1990 Coll., on Local Fees, as amended.

There are also other possibilities to improve the financial situation in waste management and the most commonly used is a system EKO-KOM[1], which provides a financial reward according to the amount of separated waste and submitted documents about its reuse, see table 4.

[1] EKO-KOM in an authorised packaging company established in 1997 by industrial companies producing packaged goods. This non-profit join-stock company has created and successfully provides a countrywide system which ensures sorting, recycling and reuse of packaging materials on a European level.

3 CASE STUDY

Data of expenses in the years 2013 – 2015 was used for the analysis. Statutory city of Přerov establish the municipal waste fee using a generally binding decree (GBD) about local fees to charge for operation of system for assembling, collection, transportation, sorting, reusing and disposal.

The charge rate is enacted by Provision Section 10 (5) of the Local Fees Act as two-component and the maximum rate can reach the level of 1,000 CZK per person per year. One component is represented by the amount of 250 CZK per person per year and according to the Local Fee Act no justification is needed. The city of Přerov updates this amout regularly by a calculation based on total expences of the whole waste management system. However many municipalities concider this component to be fixed.

Tables 1 and 2 show a trend of development in waste management in proportion of two sums of money – total expenses for operating the whole waste management system and net amount spent for collection and transport of unsorted municipal waste.

Tab. 1 Operating costs of the waste management system in the city of Přerov 2013 - 2015

	2013	2014	2015
Total costs of the whole waste management system in the city of Přerov in CZK	26048899,18	27874208,28	28962342,53
Operating costs/ ratepayer in CZK	526,35	584,9	641,63
Operating costs / inhabitant in CZK	584,87	629,53	658,32

Source: own processing, Final Account Statement of the city of Přerov (2013 – 2016)

Tab. 2 Costs of collection of unsorted municipal waste in the city of Přerov 2013 - 2015

	2013	2014	2015
Total costs of collection and transport of unsorted municipal waste	21086339	21256769,61	20007977,09
Costs per ratepayer in CZK	464,37	470,93	445,01
Costs per inhabitant in CZK	473,44	480,07	454,78

Source: own processing, Final Account Statement of the city of Přerov (2013 – 2016)

The above tables show that the amount of the municipal waste collection fee, which had amounted to 650 CZK in the period 2013 – 2015, should be sufficient. However, in the 2015 this amount was at the limit of possibilities according to the table 1, where cost per inhabitant is quantified to 658.32 CZK. The amount is calculated per inhabitant and per ratepayer. The fact that there are people who are exempted from the charge and are avoiding the duty of paying is not taken into account.

In the final consequence, this fact is decisive. On an average, 2,200 people who have permanent residence or own a real estate in the city of Přerov were exempted from the charge in the years 2013 – 2015. Totally different amounts came out when and average number of exempted people was subtracted from the total number of ratepayers and then the costs per ratepayer was recalculated which is shown in the table 3. The amount calculated using this alternative method for the second part of the fee (i.e. costs of collection and transport of unsorted municipal waste) per ratepayer is not that dramatically different from the original one but even a little difference means a big burden for the municipality budget.

Tab. 3 Costs calculation for municipality management system in Přerov omitting excluded people.

	2013	2014	2015
Total costs of the whole waste management system in the city of Přerov in CZK	26048899,18	27874208,28	28962342,53
Number of ratepayers	45408	45138	44901
Cots per ratepayer in CZK	526,35	584,9	641,63
Average number of exempted people	2200	2200	2200
Total costs of the whole waste management system in the city of Přerov in CZK per person excluding exemted people	602,87	649,17	678,26
Total costs of collection and transport of unsorted municipal waste	21086339,41	21256769,61	20007977,09
Costs per ratepayer in CZK	464,37	470,93	445,01
Total costs of collection and transport of unsorted municipal waste excluding exemted people	488,01	495,06	468,55

Source: own processing, Final Account Statement of the city of Přerov (2013 – 2016)

Tab. 4 – EKO-KOM bonus funds use in the city of Přerov

Year	Amount in CZK	Use of funds
2013	2828000	Sorting line reconstruction, project documentation and building of the stations for collection containers for sorted waste, purchasing of the containers for sorted waste in kindergarten, purchasing of 5,000 sets of colour bags for waste sorting (distributed to households)
2014	4529158	building a collection yard in the area of barracks in Želátovská street for collection and separation of municipal waste, project documentation processing and building of the stations for collection containers for sorted municipal waste
2015	4691299	project documentation processing and building of the stations for collection containers for sorted municipal waste

Source: own processing, Přerovské listy, 2013 – 2015.

CONCLUSION

The main topic in waste management nowadays is waste minimisation and waste prevention. According to 3Rs strategy the priorities should be set as follows: reduce, reuse and recycle and then other use such as waste-to-energy process. On the very last place there is waste disposal meeting all requirements, legislation and standards frame and rules for health and safety protection of people and environment.

Waste management issues are getting more important also due to oncoming termination of waste dumping. Relevant paragraph in the amendment to the Waste Act determines that dumping of mixed municipal, recyclable and reusable waste determined by an implementing legal regulation will be forbidden by the year 2024.

The system for municipality waste assembling, collection, transportation, sorting, recycling and disposal in the city of Přerov was analysed and it has been shown that this service is provided on a sufficient level for an acceptable price and of an appropriate quality. The most inefficient seems to be the part of environmental education. Neither the city of Přerov nor Technické služby ltd takes any steps to encourage ecological responsibility of the citizens of the city. A greater promotion of this problemacy would surely do good towards the plan of minimisation of waste production. The promotion should be focused on environmental education within preschool education using e.g. competitions and events for children joined with waste separation problems.

According to the analysis outcome in the field of waste management there is an unambiguous recommendation to reopen the discussion about building a waste-to-energy facility. Building such a facility in the area of the city of Přerov would of course require detailed logistics and technical solution so that it would not cause worsening of life quality in Přerov and its surroundings. Although it is an extremely expensive project, its building would facilitate both transitions in handling of municipal waste and economic growth in the city thanks to creating new employment opportunities.

Under the terms of municipal waste collection, the inhabitants of Přerov cannot avoid increasing the amount of the charge in the future, nevertheless it would be appropriate to add to this unpopular step a thorough rationalization. Either this will be due to transportation of the waste to the nearest incinerator in Brno or Vienna and related necessity of building a waste tranship area or due to inhabitants decrease. Financial process is complicated because of interconnection with the city of Přerov authorities and Technické služby ltd. It would be appropriate to improve transparency of processes and flow among individual organization and their components.

REFERENCES

[1] OCHRANA, František. *Veřejné služby – jejich poskytování, zadávání a hodnocení*. Praha: Ekopress. 167 s. ISBN 978-80-86929-31-6.

[2] Ministerstvo životního prostředí*: Odpadové hospodářství [online]*. 2017 [cit. 2017-04-01]. Dostupné z: http://www.mzp.cz/cz/odpadove_hospodarstvi.

[3] Magistrát města Přerov: Magistrát [online]. 2017 [cit. 2017-04-01]. Dostupné z: http://whttp://www.prerov.eu/cs/magistrat/hospodareni-mesta/zaverecny-ucet-mesta.html.

THE IMPORTANCE OF INVENTORY THEORY FOR MANAGERIAL THINKING

VÝZNAM TEÓRIE ZÁSOB PRE MANAŽÉRSKE MYSLENIE

Edina Jenčová, Ing., PhD.[2]

Katedra manažmentu leteckej prevádzky

Letecká fakulta, Technická univerzita v Košiciach

e-mail: edina.jencova@tuke.sk

Juraj Vagner, Ing., PhD.[3]

Katedra letovej prípravy

Letecká fakulta, Technická univerzita v Košiciach

e-mail: juraj.vagner@tuke.sk

Abstract

Inventory management is one of the most popular disciplines of operational research. Stocks on the one hand facilitate the production, on the other hand, bind considerable financial resources. The aim of the paper is to discuss the importance of inventory theory for managerial thinking. The first part of the paper explains the importance of inventory for the company and specifies their function in the company. The next part of the contribution consists of the classification of the costs necessary for the supply as well as the possibilities of inventory optimization. The last part of the paper highlights the importance of inventory theory for managerial thinking.

Abstrakt

Riadenie zásob patrí k veľmi vyhľadávaným disciplínam operačního výskumu. Zásoby na jednej strane uľahčujú výrobu, na druhej strane však viažu značné finančné zdroje. Cieľom príspevku je pojednať o význame teorie zásob pre manažérske myslenie. Prvá časť príspevku objasňuje význam zásob pre podnik a špecifikuje ich funkciu v podniku. V ďalšej časti príspevku je uvedená klasifikácia nákladov potrebných na zásobovanie, jako aj možnosti optimalizácie zásob. Posledná časť príspevku je zdôrazňuje význam riadenia zásob pre manažérske myslenie.

Key words (up to 5 keywords)

Inventory theory, inventory management, optimization, costs, storage, supply

Klíčová slova

Teória zásob, riadenie zásob, optimalizácia, náklady, skladovanie, dodávka

[2] Odborná asistentka, Katedra manažmentu leteckej prevádzky, Letecká fakulta, Technická univerzita v Košiciach

[3] Odborný asistent, Katedra letovej prípravy, Letecká fakulta, Technická univerzita v Košiciach

INTRODUCTION

Existence of inventory is part of the business of each manufacturing entity. On the one hand, inventory facilitate the production, on the other hand, they bind substantial financial resources, resulting both from the actual purchase of the inventory, storage and handling, insurance, taxes, depreciation inventory losses, as well as lack of necessary supplies associated with restriction, respectively. stopping production, etc. The size of the indicated financial resources can effectively influence the management of the enterprise by reasonably managing the supply process.

For this purpose, there are a number of mathematical models and methods that are part of the "Theory of Stocks" discipline, which is given sufficient attention in many publications and literature. Inventory management is one of the most popular disciplines of operational research.

It is a fact that the amount of capital held in stocks is around 15% of total assets in the processing industry and about 20% of total assets in business enterprises. It is so obvious that even a relatively small reduction in inventory can have a significant economic impact on the enterprise. There are several dozen models of stocks theory..

1 THE IMPORTANCE OF INVENTORY FOR THE COMPANY AND THEIR FUNCTION

Holding of inventory results from the basic functions that the inventory performs in the company. These functions can be divided into three main categories [1]:

1. Geographical function - which results from the fact that stocks allow for local separation of production and consumption and the optimal allocation of production capacities in terms of sources of raw materials, energy and workers.
2. The balancing and technological function – in order to ensure the smoothness of the production process, to remove capacity discrepancies between production operations, production and transport options at economically optimal rates, to overcome time variations in production and consumption and to eliminate unpredictable fluctuations in requirements and deliveries.
3. Speculative function – which aims to achieve extraordinary profit by making appropriate purchases at a lower price for future sale at a higher price, or pre-stocking a business for a price reduction or an anticipated increase in the price of the material. However, today's management practice emphasizes the reduction of inventories. The main negative impact of inventory is that it binds capital, consumes additional work and resources (inventories you need to store, what costs energy costs, maintenance and repairs of warehouses, wage costs of warehouses, etc.), and they carry the risk of depreciation, inapplicability or inappropriateness caused, for example, by changing the production program, or by changes in customers preferences. Capital invested in stocks then lacks in financing technological development, threatens the solvency of the company and reduces its credibility in dealing with business partners and banks. Inventory size should therefore be as small as possible for the reasons given, but on the other hand it must ensure sufficient availability of supplies to customers. Obviously, both aspects (i.e., minimization of stocks versus high availability of supplies) are contradictory and the company has to choose a compromise between them.

2 CLASSIFICATION OF INVENTORY (STORAGE) COSTS

The cost of inventory creation and maintenance over one cycle (during a single supply) consists of three components:

- the cost of processing (issuing) the order,
- the cost of purchasing a substrate,
- storage costs.

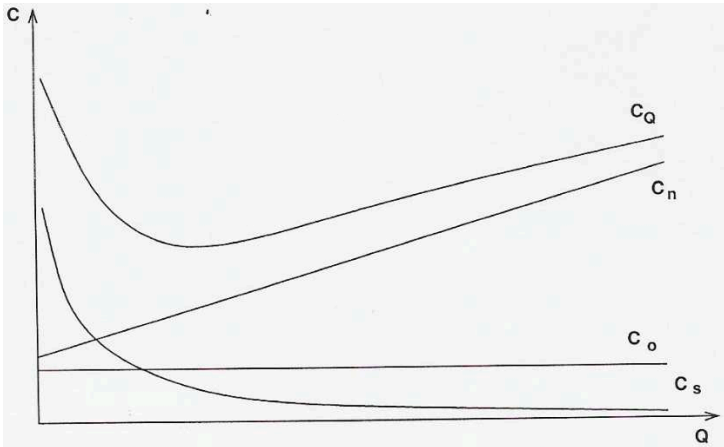

Fig. 1 Costs for creating and maintaining inventory
Source: Bačík, J. Operačná a systémová analýza. 2009. Košice: Aprillas.r.o. ISBN 978-80-89346-17-2

The size of the total cost CQ to create and maintain the Q amount of substrate stock is determined by several components and calculated as a sum:

$$CQ = Co + Cn + Cs \tag{1}$$

where:

Co - Total cost of order - can be considered independent of the amount of ordered substrate,

Cn - Total purchase costs - are directly proportional to Q (expressed in units of measurement) and price per unit of measurement c_n,

$$Cn = cn.Q \tag{2}$$

Cs - Total storage costs - are the product of unit costs cs, substratum stock sizes (Q) and storage time (T). Unit costs cs are partly composed of flat-rate costs and in part depend on the amount and type of storage substrate. Unit costs reflect the size of the storage costs per unit inventories amount of (IU) per unit of time (day). Total storage costs can be expressed as unit storage costs times the area under the consumption line, i.e., for continuous consumption according to the formula:

$$Cs = c_s \,.\, Q \,.\, T / 2 \tag{3}$$

CQ - Total Costs for Creating and Maintaining Q Amount of Substrate - are the sum of the cost of order processing, the cost of purchasing the substrate and the cost of storing it. They are determined by:

$$C_Q = c_O + c_N * Q + c_S * \frac{1}{2} * Q * T \tag{4}$$

The optimum stock size of the substrate is in the minimum of the cost function (CQ) and can be determined as a derivative of a cost size function according to the amount Q. [1]

3 INVENTORY OPTIMIZATION

The development of the economic boom is responsive to stocks, so inventory movement is one of the important economic barometers. From a macroeconomic point of view, inventory reduction is seen as a manifestation of an improving economic boom (boom = production and circulation increase phase, coincidence of favorable circumstances). On the contrary, its decline (deterioration, slowdown in economic development) always signals the growth of inventories.

At the level of businesses (companies), stocks are tied up, the maintenance of which includes not only the costs of acquisition, storage and the risk of obsolescence, but also the loss of yield in relation to other investment options. High stocks of raw materials reduce the risk that an unexpected shortage would force an enterprise to limit production or to use more expensive replacement stocks. High orders of inventories, even if they lead to large average inventories, are advantageous if an enterprise can buy at lower prices. [2]

Companies are also willing to hold higher stocks of finished products to be able to meet orders immediately. Surplus stocks are unproductively linked to money. It is desirable to maintain a reasonable balance between the cost of maintaining small and too large stocks.

An efficient inventory management system focuses on inventory optimization. This is the optimum amount of inventory, where as a criterion for decision-making there is a minimization of the costs associated with their procurement and storage.

Access to inventory management may be twofold in relation to the volume of production. One is that the state of stocks is held at an unchanged level, and fluctuations in sales are transferred to changes in the volume of production. The second approach is the opposite, the production level is stable over a certain period and stock levels fluctuate according to optimum demand. The choice of access depends on the advantage in specific conditions. [2]

Several techniques are used for optimizing inventory height conversions. The simplest model is the model of determining the optimum supply size for continuous uniform consumption, where Harris's formula of inventory theory is applied. It is based on an analysis of the costs associated with the management of inventories and their behavior in changing the factors that affect them (minimizing them). Other methods include the index and correlation method, the determination of needs based on the average inventory height and the indicators of their use, and other methods based on inventory theory and not exempting stochastic models. [2]

Financial analysis of receivables monitors their amount, which binds the capital of the company and forms the transitory stage of the company's circulation. It also contains and guides the development and structure of receivables, the conditions of their origination and duration, profitability and repayment.

In the current situation of high insolvency of companies, it is necessary to consider the amount of commercial loan and the time of its provision, or the possibility of providing discounts in the case of prompt payment.

4 THE IMPORTANCE OF INVENTORY THEORY FOR MANAGERIAL THINKING

Methods of inventory theory are the basis for providing decision bases for determining the amount of resources (eg. Materials and supplies, raw materials, fuel, energy), which are essential for rational or optimal level of functioning of the planned operation of the system under consideration.

They can be both deterministic and stochastic models. The second case is more common to solving practical managerial tasks, as the stochastic understanding of consumption and stock replenishment better reflects reality. The resulting solution, for example, aims to minimize the total costs (or the average cost of these costs) that arise as a set of storage costs, the loss of the circulation of resources, the costs of acquiring and preparing materials for production, losses from unrealized sales, likely costs arising to ensure the production process also with the help of extraordinary measures, including extraordinary transport, etc. [3]

In US management practice, a set of methods of stock theory has a broad field of application. Typical examples include rational (theoretically optimal) height and inventory replenishment (height, ordering, or retention intervals), both for materials and raw materials, some sub-deliveries, tools, or fuel. It can not only be a normal supply, but also a supply of insurance stocks, multipurpose reserves.

Since the traditional capitalist economy has always paid attention to the commitment of funds in resources, they have found methods of inventory theory in it. However, the application is always a matter of team work of specialists.

CONCLUSION

Inventory Management Theory provides a wide range of options for cost management and therefore forms a significant part of company logistics analyzes in a market environment.

Effective inventory management, despite the extensive theoretical elaboration of modeling techniques, hampers under specific conditions many of the issues that business management needs to address continuously. The simplest is to manage inventory in a subject whose product sales are not subject to significant seasonal effects over a longer period of time (eg a year).

REFERENCES

[1] Bačík, J. *Operačná a systémová analýza*. 2009. Košice: Aprillas.r.o. ISBN 978-80-89346-17-2

[2] Herbert E. Scarf. *Inventory Theory*. New Heaven. Connecticut. 2002: Cowles Foundation for Research in Economics Yale University. Available at: https://www.researchgate.net/publication/220243732_Inventory_Theory

[3] Roberts, Donald M. 1962. *Approximations to optimal policies in a dynamic inventory model.* K. J. Arrow, S. Karlin, H. E.Scarf, eds. Studies in Applied Probability and Ma Management Science. Stanford University Press, Stanford, CA.

[4] Trebuňa, P., Pekarčíková, M. *Zásobovacia a distribučná logistika.* 2011. Košice: Technická univerzita v Košiciach. ISBN 9788055307978.

COMPUTER SUPPORT TO MANUFACTURING LOGISTICS IN RESPECT OF PHILOSOPHY INDUSTRY 4.0

POČÍTAČOVÁ PODPORA VÝROBNEJ LOGISTIKY VZHĽADOM NA FILOZOFIU INDUSTRY 4.0

Ing. Jaroslav Melko[4]

Faculty of Mechanical Engineering, Prototype and innovation center
Technical University of Košice
e-mail: jaroslav.melko@tuke.sk

Ing. Adrián Rjabušin[5]

Faculty of Mechanical Engineering, Prototype and innovation center
Technical University of Košice
e-mail: adrian.rjabusin@tuke.sk

prof. Ing. Gabriel Fedorko, PhD.

Ústav Logistiky, Faculty of Mining, Ecology, Process Controlling and Geotechnology
Technical University of Košice
e-mail: gabriel.fedorko@tuke.sk

Abstract

This paper describes modules for CNC machining in the most used CAD programs such as Autodesk Inventor, Catia, Creo Parametric and SolidWorks. Individual modules have a wide range of usage, not only in the engineering industry, but also include several machining functions such as milling, turning, drilling, wire cutting, roughing, simulation and analysis.

Abstrakt

V príspevku je opísaná téma modulov pre CNC obrábanie v najpoužívanejších CAD programoch, ako sú Autodesk Inventor, Catia, Creo Parametric a SolidWorks. Jednotlivé moduly majú širokú škálu použitia, nie len v strojárskom priemysle, taktiež niekoľko funkcií obrábania, ako sú frézovanie, sústruženie, vŕtanie, drôtorez, hrubovanie, ale aj simuláciu a analýzu.

Key words

CAD, logistics, machining, software, Industry 4.0

Klíčová slova

CAD, logistika, obrábanie, softvér, Industry 4.0

INTRODUCTION

We are increasingly reading and listening to the fourth industrial revolution. Everyone talks about it, and everyone seems to think something different about it. The most common in this

[4] Scientist-researcher
[5] Scientist-researcher

context is the expression : "Internet of Things", but only few of us have clear idea about this expression. For this reason, we would rather use the word „SMART“ to explain that.

SMART systems have been used by almost everyone for years. When we buy something, or pay for something, the first question of the cashier is: "Do you have our club card?". The basic principle lies in the use of information that had remained forgotten and unused until then. Thus, the store knows when and what goods to buy, pick up, optimize the assortment, what to offer to customers in that store.

World Industry 4.0 is based on the ability of people, machines, devices, logistic systems and products to communicate and collaborate directly with each other. Everything is approaching to total crosslinking. The reason is the use of a huge amount of information that has not been captured so far to make a much faster and more accurate decisions. The close connection of products, equipment and people increases the efficiency of production machines and equipment, reduces costs and saves resources. Intelligent tracking and transparent processes provide businesses with a consistent overview that will allow people to respond flexibly and quickly to changes in markets.

Intelligent factory works in an intelligent environment (Smart Grids, Smart Mobility, Smart Logistics, Smart Buildings ...)

The Intelligent enterprise result is an intelligent product that is not overpriced and responds to individual customer needs and is also profitable for the manufacturer..

1 BASIC FEATURES OF INDUSTRY 4.0

1. Vertical connection of intelligent manufacturing systems such as intelligent factories and intelligent products and crosslinking, for example intelligent logistics, manufacturing and marketing and intelligent services with a strong focus on individual and specific needs of customer.
2. Horizontal integration through a new generation of global networks, creating added-value, including the integration of business partners and customers, new business models, and cross-country and continent cooperation
3. The application of technology throughout the whole value chain, not only in the manufacturing process but also in the final product - that means throughout the life cycle of the product
4. Accelerating through exponential technologies that need not necessarily be new in their development history, but only now become capable of mass application on the market, because their prices will drop rapidly (e.g. various sensors) and their performance will grow massively. [7]

2 SOFTWARE AUTODESK INVENTOR

Inventor is basic solution of Autodesk's company for production of digital prototypes – that complete modeles for conceptual design, analysis and simulation, visualization, electro, project management, document management.

The CNC machining module for a wide range of NC machines is integrated directly into the CAD system and is called InventorCAM. It supports fuctions of 2-axis, 2.5-axis, 3-axis milling,

4-axis and 5-axis index milling, continual 4-axis milling, continual 5-axis milling, power tool turning (also continual 5-axis); wire cutting. The new iMachining model reduces work cycles up to 70% and significantly improves tool life.

The main advantages are: the siplicity of control combined with powerful CAM features and highly detailed modifiable postprocessors that allow to generate an efficient CNC code. InventorCAM is very widespread in engineering, electrical engineering, healthcare, automotive and aerospace industries, as well as in production of mold and other shape-complicated components.

Perfect integration of InventorCAM into Inventor environment allows to make definitions of all machining operations, path calculations and simulation without need of leaving the Inventor′s environment. All 2D and 3D geometries used for defining the machining are fully associated with the geometry of Inventor model. In this way, it is possible to machine the components as well as the assemblies. In machining, it is possible to use variants of models and assemblies, individual stages of machined components or machining environment changing during machining. If the Inventor model geometry, that was used to define the machining , changes, InventorCAM will automatically enables all machining operations with altered geometry. [5]

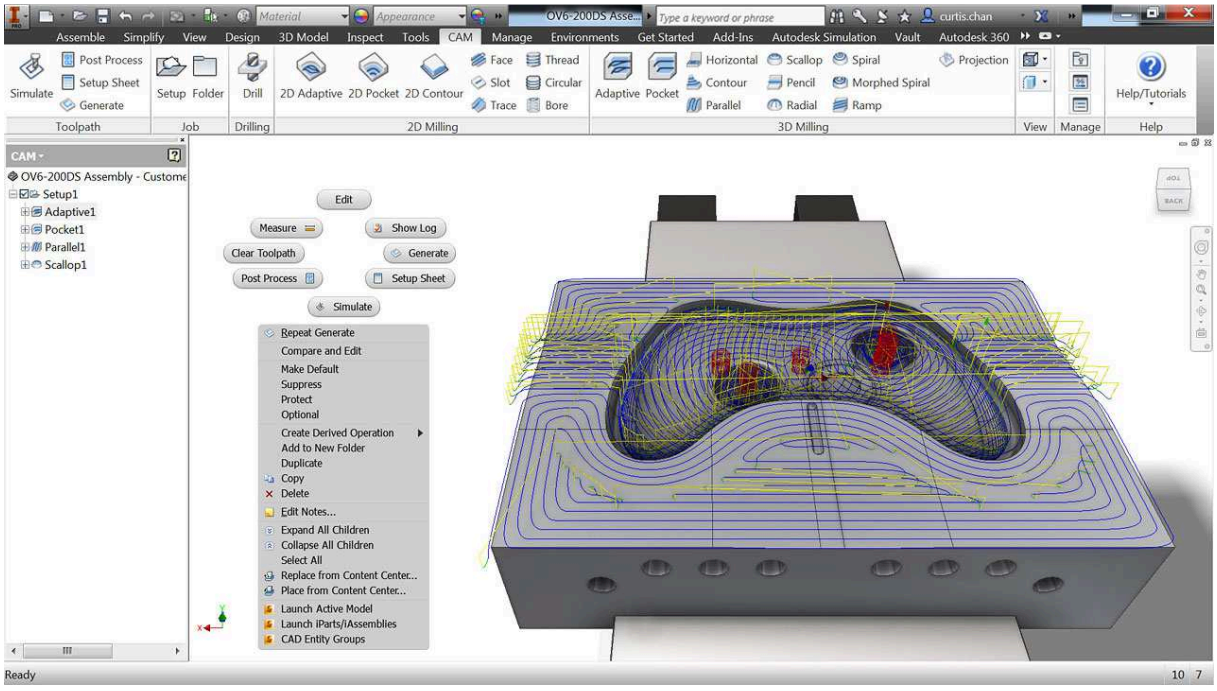

Fig. 1 Inventor CAM Express [6]

iMachining is a new milling technology in InventorCAM, which uses spiral cuttings between the curves and the side step controlled algorithm , what allows to use the full length of the tools, but the tools do not suffer from one-shot collapsing and friction. Cutting at maximum depth allows to distribute load of along its entire length of the tool and not just a few of its last millimeters. A precise control of the chip′s thickness keeps the tool's load constant, that allows to take a much larger amount of material at the same time, even when working with very hard materials.

In applications requiring small diameter tools, shifts and speed are automatically generated by the Technology Wizard which takes into account properties of machine, tool, material, geometry and user-defined machining speeds. IREst and iFinish are part of the process which ensure that residual material is machined by increasigly smaller and smaller tools so that the final completion of the surface can be conducted at the full depth of the tool and is shake-free. [5]

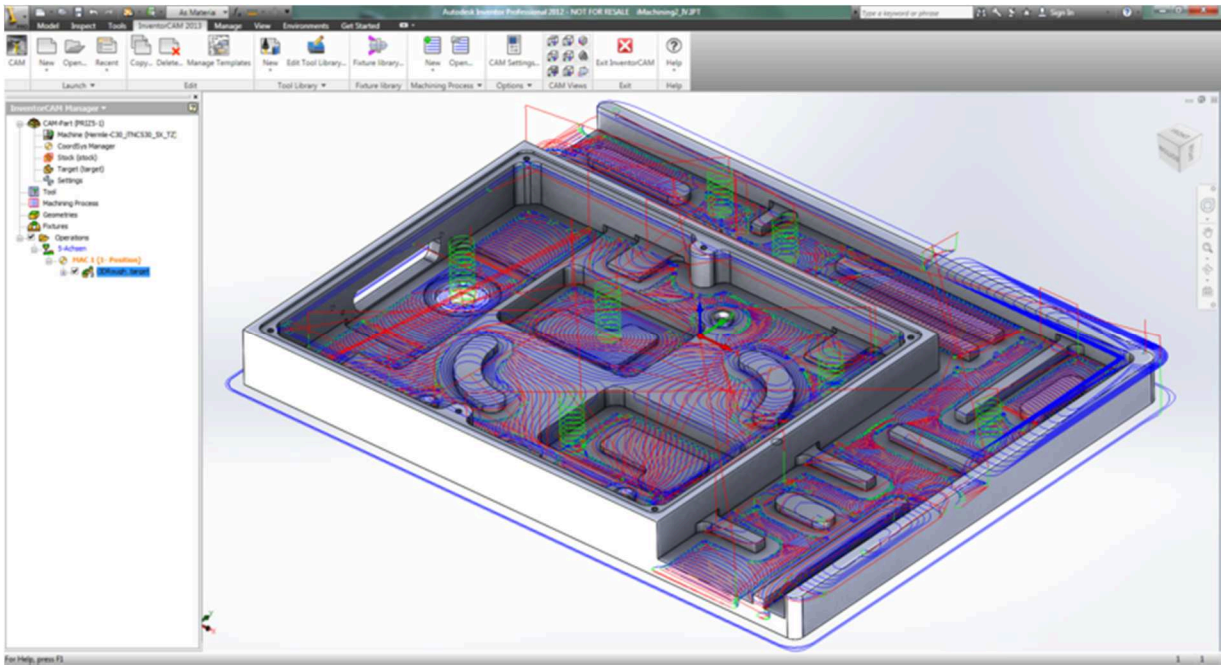

Fig. 2 iMachining 3D technology [6]

3 SOFTWARE CREO PARAMETRIC

Creo Parametric is PTC's new product family of construction software company PTC, providing a scalable set of correct, interoperable and integrated construction applications, so called Apps, with patented technology that follows the current needs of wide spectrum of users that make up large-scale developed teams.

PTC Creo is designed to solve problems that have not yet been solved within the CAD system: sipmle use, interoperability, assembly management, and technology closure. Its strength and performance can be enhanced by the use of a wide range of expansion modules, but also by scalable bundles for designers that are optimized to meet different specialized needs.

Creo Parametric will give you the most robust and scalable toolbox to create 3D products with greater performance, flexibility and speed to help you solve your most pressing problems, including applying any changes, working with multi-CAD data, constructing electromechanisms, and speeding up the entire product development process. Scalability offers you integrated, parametric, 3D CAD, CAID, CAM and CAE solutions to construct faster than ever before with maximum innovation and quality to create exceptional products. [3]

CREO COMPLETE MACHINING

Creo Complete Machining enables a complete solution for creating all types of CNC machines used in the production. It also provides the technology with the ability of automated NC programming to create, control and optimize 3-5-axis machining on machining centers, 2-4-axis turning, 4-axis wire cutting.

Advantages:

- 3-5 axis continual milling, support for 4-axis and 5-axis positioning
- 2-4-axis turning, 2-4-axis wire cutting
- Creating of tool path directly on volume models will improve product quality and Continual production
- Short time for changing of the program, the tool paths are associatively modified according to the design changes of the product
- Includes Creo Production Machining as well as Creo Prismatics and Multi-Surface Millingof an equation [3]

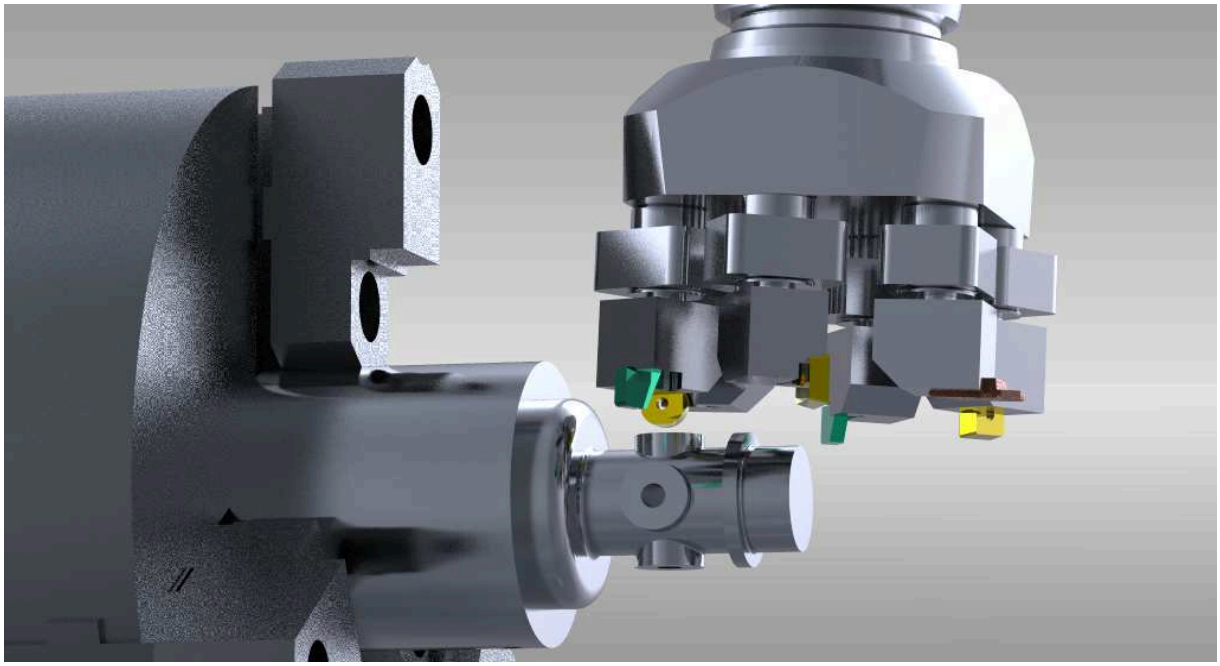

Fig. 3 Creo Complete Machining [3]

4 SOFTWARE SOLIDWORKS

SolidCAM, as a plug-in module for SolidWorks, provides functions for defining of machining operations, for simulating and checking machining and generating a CNC program. Utilizing powerful SolidCAM features in a user-friendly SolidWorks environment, programming CNC machines is very easy and efficient. All tasks associated with controlling of 3D model parts or assemblies are solved by SolidWorks tools and features. SolidWorks tools

allow to work with geometry - modeling of parts of compound system, and generating of drawings.

SolidCAM is primarily designed for CNC machining with a focus on chip machining. Among the machined materials, the most common are metals, but also plastics, wood and other alternative materials. A key feature of SolidCAM is a degree of adaptation to user requirements. In addition to typical chip machining tasks, SolidCAM can find effective application in other related manufacturing methods where CNC machine control is used.

Characteristics of the CAD / CAM system:

- Comprehensive 3D CAD tools, hybrid modeling, assemblies, drawings
- CAM programming from 2.5 to 5-axis machining
- Milling and turning functions
- Specialized complementary module for wire cutting
- Specialized complementary module for propositions of forms and electrodes
- Extensive and advanced implementation and adaptation to the customer′s reguirements [4]

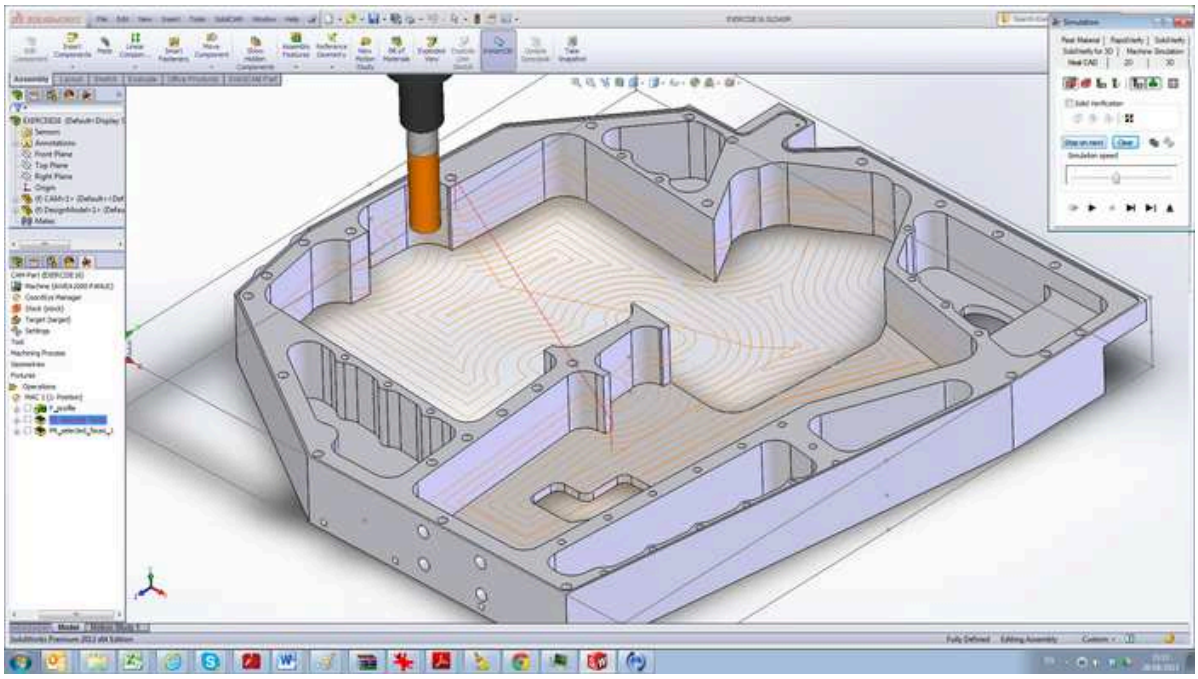

Fig. 4 SolidWorks - milling [4]

IMACHINING

The first real break in tool-path technology, which allows machining two to three times faster and deeper, thanks to optimization of tool load and its full-speed along all the trajectory of its moving. The first system of its kind, which synchronizes the machine, cutter, material and

tool path in one CAM system. iMachining is an intelligent system that adapts material, geometry, cutting tools and machining device to each other so that the user performs the entire operation and minimizes the need for testing and occurance of errors. [4]

CONCLUSION

This paper describes the most widely used CAD programs in the world and their best modules for CNC machining, either milling, turning or wire cutting. Each CAM system requires modifiing to customer′s needs. Machining CNC machines are equipped with various control systems which can be used differently according to the habits and requirements of the user himself.

The article is part of the grant projects ITMS26110230086 and FGV / 2013/12.

REFERENCES

[1] MADÁČ, K., KRÁĽ, J. *Parametrické CREO-vanie modelov a NC programov.* Košice: TU, 2012. 142 s. ISBN 978-80-553-0854-8.

[2] KRÁĽ, J. a kol. *Základy programovania NC strojov pre automobilovú výrobu*. Košice: TU, 2011. 128 s. ISBN 978-80-553-0808-1.

[3] http://www.ptc.com/product/creo/parametric

[4] http://www.schiertechnik.sk/solidcam/

[5] http://www.cadstudio.cz/inventorcam

[6] http://cam.autodesk.com/

[7] http://industry4.sk/

OPTIMIZATION OF THE PRODUCTION PLAN IN A FOOD COMPANY

OPTIMALIZACE PLÁNU VÝROBY V POTRAVINÁŘSKÉ SPOLEČNOSTI

prof. RNDr. Ing. Miloš Šeda, Ph.D.

Department of Master Studies
College of Logistics
e-mail: milos.seda@vslg.cz

Ing. Eva Smítalová

College of Logistics
e-mail: SmitaEv@vslg.cz

Abstract

The paper deals with production planning in a food company, taking into account contracts, sales estimates, maximum inventory levels and production capacities related to working shifts to maximize the profit objective function.

Abstrakt

Práce se zabývá plánováním výroby v potravinářské společnosti s přihlédnutím ke smlouvám, odhadům odbytu, maximálním zásobám a výrobním kapacitám souvisejícím s pracovními posuny, aby se maximalizovala funkce ziskového cíle.

Key words

linear programming, Simplex method, GAMS

Klíčová slova

lineární programování, metoda Simplex, GAMS

INTRODUCTION

The issues connected with production, its organization and effective management have many forms and depend to a great extent on the nature of the given field. One such issue is to determine the number of product types produced that will maximize total profit based on the revenues from selling individual product types and capacity limits (e.g. workforce, machine time, raw materials, financial capital) [2], [3].

Such problems belong to the field of production process scheduling (both in flow production and custom production) [6] where the aim is to prepare a schedule that will minimize total time needed for performing all tasks (such as completing the products on assembly lines).

In addition to scheduling the initiation of individual tasks, project management also needs to consider the time reserve of each task in order to identify critical activities that would delay the completion of the whole project if their time allocation was exceeded. To prevent this, such activities should be given special attention, e.g. through construction supervision in large investment building projects.

In the crop production of an agricultural cooperative cultivating fields of varying soil quality and crop yields, the aim is to find a cropping plan maximizing total profit based on estimated yields of different crop types and contracted purchase prices [5]. On the other hand, livestock

production needs to minimize the cost of feed rations that provide the necessary nutrient content for livestock growth.

In a number of examples presented above, the problem is that certain quantities are estimates only, e.g. the duration of some activities or yields in agriculture. Also, prices may vary with the changes in demand, and so the models are time-dependent and may require modifications for the given situation.

1. MODEL DEVELOPMENT

For writing her diploma thesis [4], Eva Smítalová obtained data from a food company which remains unspecified here for competitive reasons. The aim was to develop a model that would find an optimal production plan maximizing sales profits under specific constraints.

The data are very heterogeneous including production capacities, acceptable inventory levels, contracts for the supply of six types of food, and non-contracted food sales estimates (minimum and maximum).

The model uses the following symbols:

j … the position of the given food in the production sequence, in this case $j = 1, \ldots, 6$
x_j … production quantity of the j-th food (decision variables of the model)
k_j … contracted supply of the j-th food in tonnes per month
s_j … minimum non-contracted sales estimate of the j-th food in tonnes per month
s_j … maximum non-contracted sales estimate of the j-th food in tonnes per month
z_j … maximum inventory level of the j-th food in stock per one quarter
b_i … right side of the i-th constraint, where b_1 = available machine time per month
c_j … profit from the sale of 1 tonne of the j-th food
f … total profit (objective function)

In addition to the input values that are not the target of the calculation (i.e. all the symbols in the list above except for the decision variables xj and the objective function f), the model also incorporates constraints that relate to working shifts and indicate the amount of the j-th food produced per shift if no other food was produced at the same time. These constraints are summarized in the following table.

Tab. 1 Production capacity of individual foods

Food	Maximum production capacity in tonnes
1	4.9
2	4.8
3	5
4	5
5	5
6	4.8

From table 1 and the available amount of machine time, the first constraint can be derived. The first step is to calculate the portion of a shift that is necessary to produce one tonne of each food (e.g. for food 1, it is 100/4.9 = 20.41%, the remaining values can be calculated analogically).

Since the model works with data per month and there are 21 working days in one month, the value of 100% on the right side of the constraint must be multiplied by 21. The resulting formula of the constraint is:

$$\frac{100}{4.9}x_1 + \frac{100}{4,8}x_2 + \frac{100}{5}x_3 + \frac{100}{5}x_4 + \frac{100}{5}x_5 + \frac{100}{4,8}x_6 = 21 \cdot 100 \tag{1}$$

Nevertheless, it is obvious that equality in the constraint is not generally appropriate because the quantities produced cannot be any real numbers. These numbers represent the quantities produced in tonnes corresponding to complete pieces or packages. For example, if a shift ends in two minutes, this time might not be sufficient under a specific combination of decision variables to produce one more piece (or package), and therefore less than 100% of the shift will be used. Thus the constraint formula (1) needs to be modified:

$$\frac{100}{4.9}x_1 + \frac{100}{4,8}x_2 + \frac{100}{5}x_3 + \frac{100}{5}x_4 + \frac{100}{5}x_5 + \frac{100}{4,8}x_6 = 2100 \tag{1'}$$

Considering the contracts, the estimated minimum and maximum quantities of individual food sales per month and the maximum inventory levels per quarter (transformed to one month period as well), the production of each food must meet the following:

$$k_j + s_j \le x_j \le p_j + \frac{z_j}{3}, \quad j = 1, ..., 6 \tag{2}$$

A linear programming model, however, does not allow multiple relational operators in one formula. Therefore, constraint (2) is substituted by the following two constraints (2') and (2") with the decision variable on the left side.

$$x_j \ge k_j + s_j, \quad j = 1, ..., 6 \tag{2'}$$

$$x_j \le p_j + \frac{z_j}{3}, \quad j = 1, ..., 6 \tag{2'}$$

The usual non-negativity requirements for the decision variables are unnecessary, because they are fulfilled by (2').

Finally, the relation for the objective function f needs to be defined. The relation is standard. It is expressed by the scalar product of the profit coefficient vector per unit of the produced food and the vector of decision variables indicating their quantities. In this case of six foods, the function is:

$$f = \sum_{j=1}^{6} c_j x_j \tag{3}$$

Summarizing all the considerations, the following model of the optimization task is obtained. When using optimization tools it is advisable to group together constraint formulas with the same relational operator between the left and right sides (they can be coded in a software tool as a relation between vectors of the left and right sides). Therefore, constraint (1'), which was derived first, is assigned to the group of constraint (2").

Maximize

$$f = \sum_{j=1}^{6} c_j x_j \tag{4}$$

under constraints

$$x_j \ge k_j + s_j, \quad j = 1, ..., 6 \tag{5}$$

$$x_j \le p_j + \frac{z_j}{3}, \quad j = 1, ..., 6 \tag{6}$$

$$\frac{100}{4.9}x_1 + \frac{100}{4{,}8}x_2 + \frac{100}{5}x_3 + \frac{100}{5}x_4 + \frac{100}{5}x_5 + \frac{100}{4{,}8}x_6 = 2100 \tag{7}$$

2. MODEL IMPLEMENTATION

The model, designed in the previous section, is a linear programming model that includes 6 decision variables and 13 constraints, out of which 7 constraints are expressed with the relation ≤ and 6 constraints are expressed with the relation ≥. In the Simplex method, this means a two-phase calculation because the canonical form, in addition to the variables complementary to the relational operators ≥, also requires the use of auxiliary variables to determine the basic solution. In the first phase of the calculation, the auxiliary objective function created by the sum of the auxiliary variables is minimized.

In practice, of course, such model implementations are not done “manually” but by means of appropriate software tools, e.g. the Solver add-in in MS Excel or GAMS [1]. GAMS is a professional optimization tool developed by World Bank experts originally for solving financial mathematics problems but it has been gradually expanded into a full-featured tool for linear programming, mixed-integer programming and non-linear programming. Its demo version is freely available. Compared with the full version, it is limited only by the number of variables in the model, and therefore it is quite sufficient for small-scale problems such as the one solved in this paper.

Constraints (5), (6), (7) yield structural coefficient matrix A which is used to multiply decision variables vector x. The matrix has 13 rows and 6 columns with the following values:

$$\begin{pmatrix} 1 & 0 & 0 & 0 & 0 & 0 \\ 0 & 1 & 0 & 0 & 0 & 0 \\ 0 & 0 & 1 & 0 & 0 & 0 \\ 0 & 0 & 0 & 1 & 0 & 0 \\ 0 & 0 & 0 & 0 & 1 & 0 \\ 0 & 0 & 0 & 0 & 0 & 1 \\ 1 & 0 & 0 & 0 & 0 & 0 \\ 0 & 1 & 0 & 0 & 0 & 0 \\ 0 & 0 & 1 & 0 & 0 & 0 \\ 0 & 0 & 0 & 1 & 0 & 0 \\ 0 & 0 & 0 & 0 & 1 & 0 \\ 1 & 1 & 1 & 1 & 1 & 1 \\ 100/4.9 & 10/4.8 & 100/5 & 100/5 & 100/5 & 100/4.8 \end{pmatrix} \tag{8}$$

For the sake of brevity, only the core part of the GAMS code is provided including the expression of the objective function and the constraints.

```
*description of the set of inequations
EQUATIONS
 LINE1
 LINE2
 LINE3
 LINE4
 LINE5
 LINE6
 LINE7
 LINE8
 LINE9
 LINE10
 LINE11
 LINE12
 CAPACITY constraint related to working shift capacities
 PROFIT objective function;
 LINE1   .. SUM(J,A("1",J)*X(J))  =G= (K("1")+S("1"));
 LINE2   .. SUM(J,A("2",J)*X(J))  =G= (K("2")+S("2"));
 LINE3   .. SUM(J,A("3",J)*X(J))  =G= (K("3")+S("3"));
 LINE4   .. SUM(J,A("4",J)*X(J))  =G= (K("4")+S("4"));
 LINE5   .. SUM(J,A("5",J)*X(J))  =G= (K("5")+S("5"));
 LINE6   .. SUM(J,A("6",J)*X(J))  =G= (K("6")+S("6"));
 LINE7   .. SUM(J,A("7",J)*X(J))  =L= (P("1")+Z("1")/3);
 LINE8   .. SUM(J,A("8",J)*X(J))  =L= (P("2")+Z("2")/3);
 LINE9   .. SUM(J,A("9",J)*X(J))  =L= (P("3")+Z("3")/3);
 LINE10   .. SUM(J,A("10",J)*X(J)) =L= (P("4")+Z("4")/3);
 LINE11   .. SUM(J,A("11",J)*X(J)) =L= (P("5")+Z("5")/3);
 LINE12   .. SUM(J,A("12",J)*X(J)) =L= (P("6")+Z("6")/3);
 CAPACITY .. SUM(J,A("13",J)*X(J)) =L= 2100;
 PROFIT     .. F   =E= SUM(J,C(J)*X(J));
```

As mentioned above, since the groups of conditions have the same relational operator between the left and right sides of the relation, they can be expressed with an index as follows.

```
*description of the set of inequations
EQUATIONS
 LIEN1_6
 LIEN7_12
 CAPACITY constraint related to working shift capacities
 PROFIT objective function;
 LINE1_6(I)$(ORD(I) LE 6)   .. SUM(J,A(I,J)*X(J))    =G= (K(I)+S(I));
 LINE7_12(I)$((ORD(I) GE 7) AND (ORD(I) LE 12))
                    .. SUM(J,A(I,J)*X(J))    =L= (P(I)+(Z(I)/3));
 CAPACITY  .. SUM(J,A("13",J)*X(J)) =L= 2100;
 PROFIT             .. F  =E= SUM(J,C(J)*X(J));
```

CONCLUSION

The paper presented an approach to model an optimization problem concerning the development of a production plan to maximize profit taking into account contracted sales, estimates of the minimum and maximum quantities sold, working shift capacities and acceptable inventory levels.

The model was implemented in the Solver add-in in MS Excel as well as in GAMS. The core of the code was also included. The data were obtained from an unspecified food company and cannot be disclosed for competitive reasons. The objective function yielded the same value in both implementations which, nevertheless, may not hold in all cases. GAMS can often find better solutions than MS Excel to many problems. The reason probably lies in the fact that Solver uses a simpler numerical method rather than a fully-implemented Simplex method.

REFERENCES

[1] BROOKE, A., KENDRICK, D. a A. MEERAUS. *GAMS, release* 2.25*. A User's Guide*. Danvers, Massachussetts: Boyd & Fraser Publishing Company, 1992.

[2] HRUBINA, K., JADLOVSKÁ, A. a S. HREHOVÁ. *Algoritmy optimalizačných metod s využitím programových systémov*. Košice: TU, 2005.

[3] MALINDŽÁK, D. a kol. *Modelovanie a simulácia v logistike*. Košice: TU, 2009.

[4] SMÍTALOVÁ, E. *Optimalizace procesu plánování výroby v potravinářství*. Diplomová práce. Přerov: VŠLG, 2017. Vedoucí práce: prof. RNDr. Ing. Miloš Šeda, Ph.D.

[5] ŠEDA, M., ROUPEC, J. a J. ŠEDOVÁ. Transportation Problem and Related Tasks with Application in Agriculture. *International Journal of Applied Mathematics and Informatics*. Velká Británie: NAUN-North Atlantic University Union, 2014, **8**. ISSN 2074-1278. s. 26 – 33.

[6] ZELINKA, I. a kol. *Evoluční výpočetní techniky. Principy a aplikace*. Praha: BEN, 2009.

PRODUCTION LOGISTICS AND WASTEWATER TREATMENT

VÝROBNÍ LOGISTIKA A NAKLÁDÁNÍ S ODPADNÍ VODOU

Prof. Ing. Vladimír Strakoš, DrSc.

Department of Masters Studies
College of Logistics
e-mail: vladimir.strakos@vslg.cz

Ing. Renata Procházková

e-mail: ProchRe@vslg.cz

Ing. Martin Jurečka

e-mail: martinjurecka92@seznam.cz

Abstract

Today, many concepts are considered in terms of logistics, logistics processes, logistics costs, etc. Therefore, this article discusses the process of wastewater treatment as a production process. Household and industrial waste is continuously collected in a transport system and transported using water as a carrier to a wastewater treatment plant. Here, both components are separated and treated water returns to the natural environment while waste is used as a raw material for further processing into products which can be sold to customers. The authors adopt this rather unconventional perspective to look at the logistics of the processes by which the population is supplied with drinking water and by which waste materials are turned into useful products.

Abstrakt

Všude kolem nás slyšíme logistika, logistické procesy, logistické náklady apod. To je důvod pro zpracování názoru na proces čistění odpadních vod jako na výrobní proces. Odpad z domácnosti a průmyslu se kontinuálním dopravním systémem sbírá a pomocí vody jako nosiče a dopravuje se do čistící stanice. Tam se obě složky oddělí a čistá voda se vrací do přírody a odpady slouží jako surovina pro zpracování prodejných výrobků. Autoři se tímto netypickým pohledem dívají na logistiku procesu zásobování obyvatel pitnou vodou a produkci výrobků z odpadních materiálů.

Keywords

wastewater, logistics of WWTP processes, supply logistics, production logistics

Klíčová slova

odpadní voda, logistika procesu ČOV, zásobovací logistika, výrobní logistika

INTRODUCTION

At present, many issues are frequently discussed in terms connected with logistics, logistics processes, logistics costs, etc. In fact, our everyday life depends on transporting everything we

indispensably need or want to improve our standard of living. This is where society can benefit from logistics. People have developed powerful means of transport, mining and production equipment, information technology, and all these resources enable us to buy everything irrespective of the product place of origin. The important role of logistics is to coordinate these processes.

This article focuses on the supply of drinking water to the population and, in particular, to the final parts of this chain, i.e. to the treatment of water coming from households and various businesses.

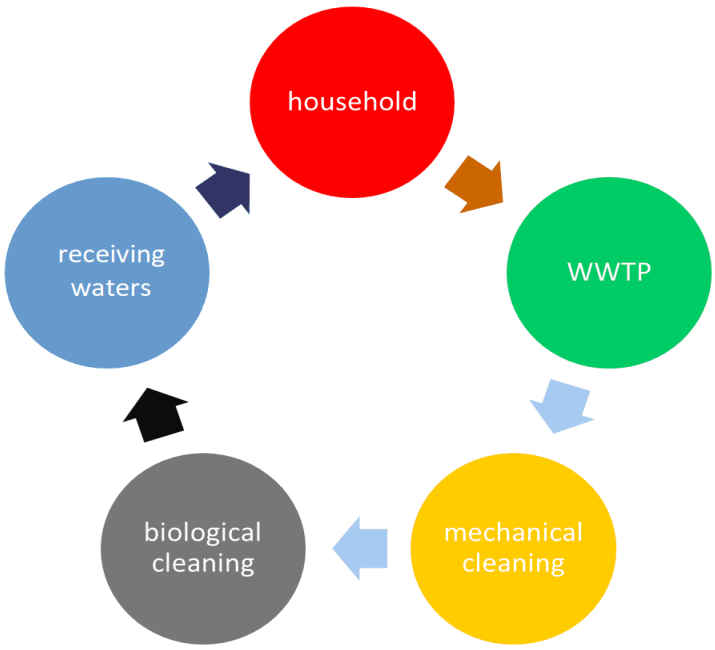

Legend:

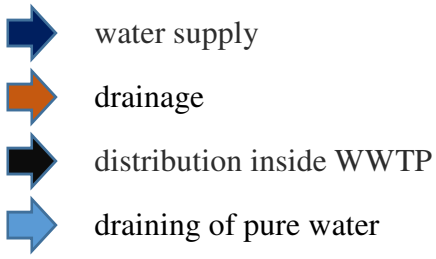

Fig. 1 Water cycle in the logistics process of the production and consumption of drinking water in households [5].

Elements indispensable for life include water, air, and food. Water must be obtained from a source (receiving water) and must be returned there in all cases again. Unfortunately, it is often returned polluted. But in order to sustain life in one place, e.g. in a city, water must be properly treated before returning to the natural environment. Figure 1 shows a simplified cycle of water in our lives. Supplying water starts with natural water purification plants, pumping stations, extensive system of drinking water pipelines, pressure reduction stations, etc. The second part is household consumption which is sometimes quite wasteful. In any case, water is polluted,

often with chemicals, after which it is transported through a complex sewer system close to the natural environment where it must be properly treated in wastewater treatment plants (WWTPs). An important process in the WWTPs is the removal of mechanical and chemical impurities from water. Only then water can be returned to the natural environment. The treatment process can be facilitated by reducing unnecessary water pollution in households.

Households and businesses have to pay for water, which leads the authors to view this system as a logistics process, i.e. as a supply chain. This approach should make it easier to find benefits for both people and nature. The goal is to manage the entire supply chain so as to eliminate all unnecessary losses that cost money. For that purpose, concepts of logistics can be utilized.

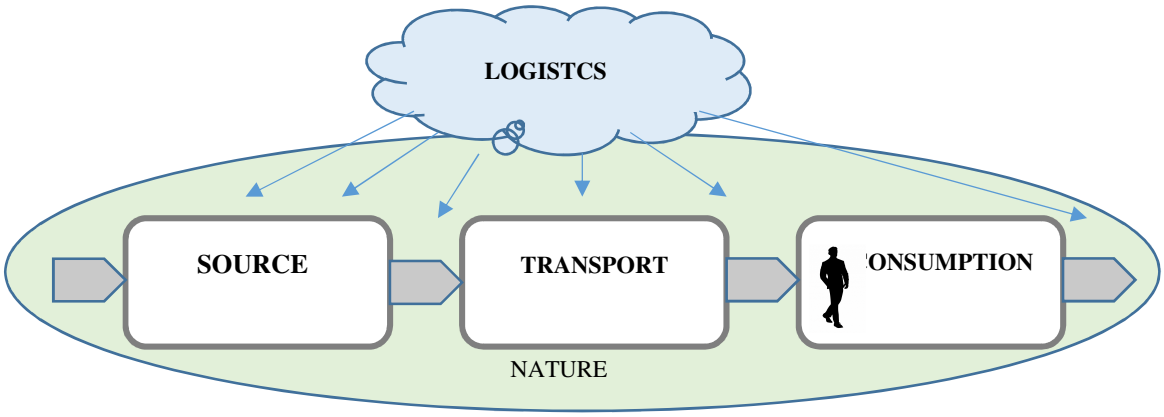

nature	household	transport	processing in WWTP	outputs from WWTP	consumption	nature
supply logistics	consumption of water	reverse logistics	production logistics	expedition logistics	consumption of WWTP products	reverse logistics

Fig. 2 Partial sections of logistics in the system of water supply and consumption by the population

Figure 2 clearly shows the logistics of water supply to the population. Many experts do not consider the supply of water, heat, electricity, or gas as a part of logistics. Nevertheless, the authors are convinced that the supply chain using continuous transport from the suppliers to the consumers through power grids has the same character as supply chains of all other products. The term “logistics” might seem to be overused in Figure 2, but indeed, logistics processes are everywhere, regardless of what we think of them, how we refer to them, or how we perceive them. In addition, all the small areas labelled as “logistics” are, in fact, very large networks requiring careful management of their internal processes. Any serious problem in the system causes a lack of some products in households and people impatiently wait for the system to return to its normal operating conditions [8].

1 SUPPLY LOGISTICS OF DRINKING WATER

This section discusses the first part of this logistics chain. Its basic function is the distribution drinking water through the water supply infrastructure which must cover all households. Supply logistics ensures that the need of households for water is satisfied by means of high quality water sources and extensive networks including drinking water pumping stations, reservoirs and pipelines, and especially advanced management of the entire distribution infrastructure. The essence of this area of logistics is well described by Strakoš et al. in [8].

In households, this distribution network is interrupted by "consumption". From this point, it becomes the domain of reverse logistics. What is "consumed" in the households almost entirely goes as "worn-out" polluted water into wastewater infrastructure, a complex network of sewers ending in a WWTP. For illustration, a small part of such transport network is shown in Figure 3.

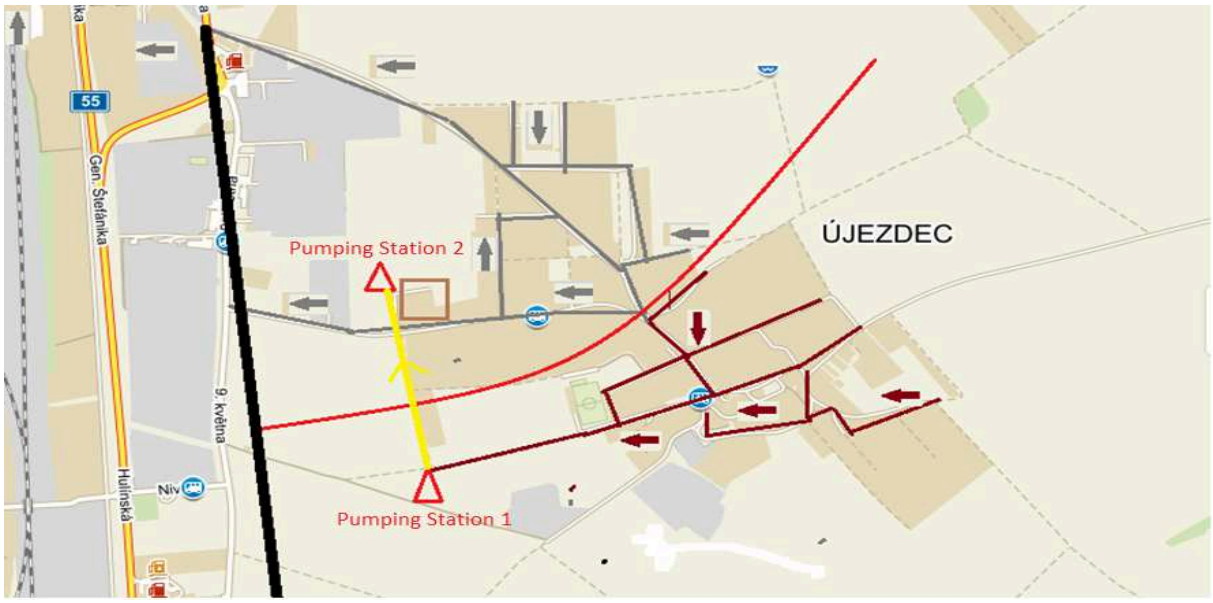

wastewater from territory 1
wastewater from territory 2
main collection pipeline of the municipality
pipeline from pumping station 1 to pumping station 2
the highest points dividing the municipality

Fig. 3 Example of collecting wastewater in a municipality divided by the terrain into two parts [5].

The seemingly simple wastewater collection network includes a number of important components that need to be maintained in a functional state, repaired in the events of failures, or controlled if required as in the case of pumping stations or overflow features. For more extensive networks, it is often necessary to supplement the wastewater collection network by a collection network for rainwater. If there are no such measures applied, torrential rains can cause substantial damage to property. For example in Las Vegas, these channels match the size of subway tunnels and their target length is 130 km.

In this case, there are two separate flow systems, where the rainwater is drained into the receiving waters directly while the wastewater is drained through WWTPs. Such wastewater networks contain a number of very important components which must be taken as a whole to see the characteristics of the entire reverse logistics system. Wastewater comes from individual households, factories, public toilets, or institutional mass catering kitchens and canteens, and as such it contains food scraps and dishwashing residuals, toilet waste, and other pollution from washing and bathing, including detergents and washing powders. These impurities are mostly of organic origin and they are roughly dispersed, finely dispersed, or dissolved.

Wastewater networks, or sewage systems, contain several indispensable components. e.g. inlet shafts, connecting shafts and chambers, ramps, chutes, etc. In case of dedicated rainwater drainage systems, these components include separate rain gullies, debris traps, street and pavement gullies, etc.

This means that "reverse logistics" in the case of wastewater is a complex network of pipelines and ducts (Figure 5) where the flow rate must be carefully maintained in all its parts. Elevation differences are overcome by means of pumping stations which provide gravity flow in the next section of the system.

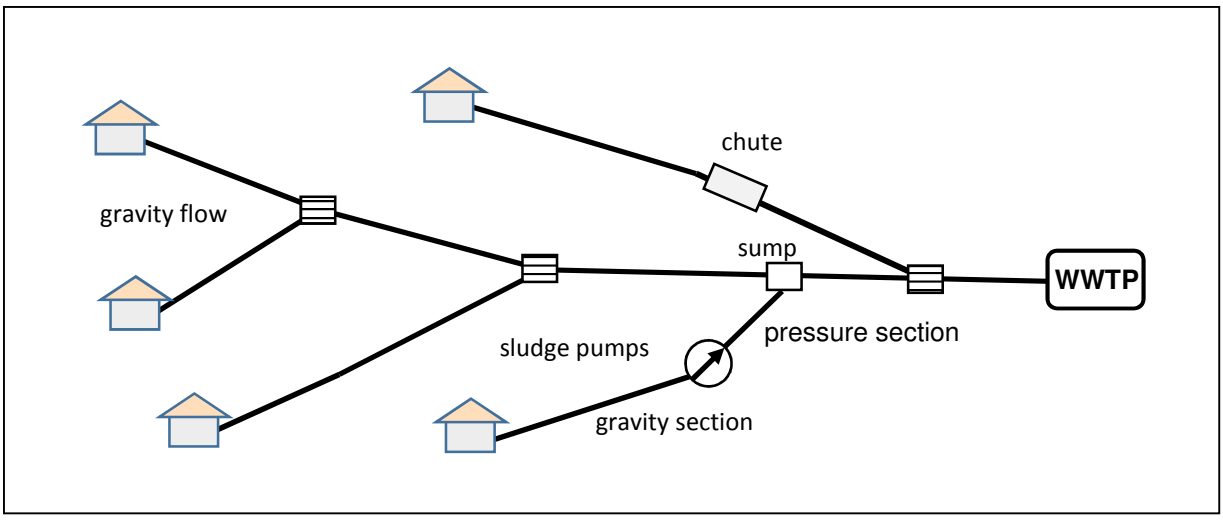

Fig. 4 "Supply network" of WWTPs with variable wastewater flow rate and level of pollution in each section. From a different perspective, also a part of reverse logistics in the drinking water supply system.

2 WASTEWATER TREATMENT PLANT

Taking an unconventional perspective, a WWTP can be perceived as a factory that receives materials in the form of waste products from the drinking water supply system and "produces" water that can be returned to the natural environment and other products suitable for reuse. It is actually a production process that turns waste into useful products with water serving as a means of transport in the whole system. A simplified scheme of such a system is shown in Figure 5.

The authors are aware that this view of the system of supplying the population with drinking water is rather unusual, nevertheless, the system in fact exhibits certain characteristics of a

supply chain, or perhaps better supply chains, and therefore of logistics. Throughout the process, the carrier function is performed by water even when it fulfils the biological need of people. The extraordinary importance of this process is obvious, and if the treatment of wastewater was not continuously improved, the environment would be completely destroyed and life in a given area would be impossible. By adopting this unusual perspective, this article aims to contribute to the improvement of processes in WWTPs.

The wastewater treatment process can be divided into mechanical and biological. Mechanical treatment consists of bar screens, settling tanks, filters, and flotation tanks. Biological processes includes biological filters, activation process, and stabilization tanks.

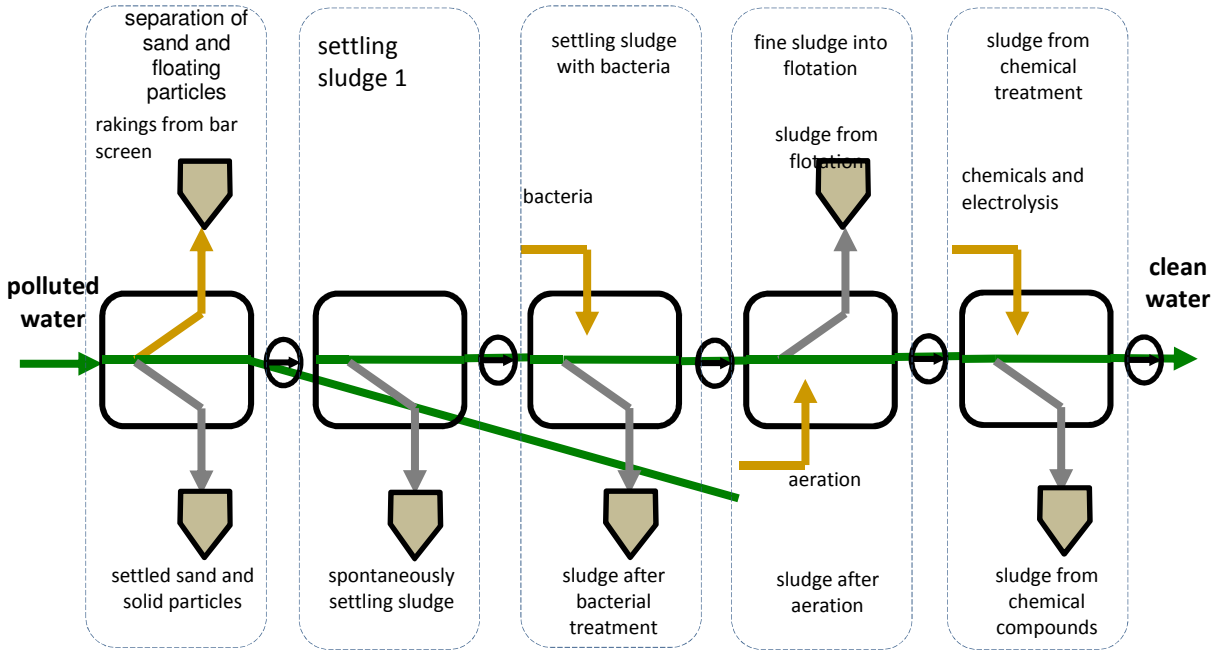

Fig. 5 Diagram of a WWTP as a production process in which the incoming raw material is processed into usable products. In this case, water serves as a means of transport from which, however, the output products are difficult to obtain.

Wastewater treatment can be divided into several steps. The first step is mechanical treatment in which larger objects and insoluble particles are removed from incoming wastewater that would not be removed in the following treatment processes. Mechanical treatment includes a gravel trap, which is used to remove rough objects moving at the bottom of the inlet sewer (especially during torrential rains). It is a sump located in the feeder just before it enters the WWTP. Then there is a rod screen for capturing larger floating objects and insoluble particles. It covers the entire cross section of the feeder.

The second step is biological treatment in which the organic parts are removed. It is divided into aerobic and anaerobic processes. In the aerobic part of biological treatment, natural self-purifying processes are accelerated by creating conditions favourable for the life of microorganisms. These microorganisms cluster on sludge flakes and convert them into insoluble mass, i.e. sludge. Aerobic processes are significantly faster than anaerobic, but they

require oxygen delivery and consume more energy. Microorganisms in the anaerobic environment live without oxygen and obtain energy directly from organic matter in wastewater. In anaerobic processes, approximately 95% of carbon is transferred from the substrate to biogas and 5% to biomass. The aerobic processes are different: about 50% of carbon is transferred to biomass and 50% of carbon is oxidized to form CO2.

Tertiary treatment is used in cases where the quality of water is insufficient to discharge it into receiving waters.To improve the quality of water, microfiltration is often used in WWTPs with earth filters and biofilters. Earth filters are mostly flow-through tanks filled with sand, gravel, or fly ash from power plants. Biofilters are similar, but they are filled with plastic material the surface of which is covered with biomass (bacteria).

Another option is coagulation induced by anodic dissolution of iron aluminium electrodes with electric current passing through them. In this process, iron or aluminium hydroxides are formed clustering into flakes which can be removed by flotation. In the electrolysis of water hydrogen and oxygen bubbles are released. Insoluble substances are bound to them forming light flotation complexes that rise to the surface and create foam. The advantage of electroflotation is that oil, grease, and even petroleum products are also effectively removed.

3 UTILIZATION OF WASTEWATER PRODUCTS FROM WWTPS

The following text is based on an article written by Vladimír Jirmus, greywater and energy expert at ASIO. Wastewater contains organic matter and thermal energy, the amount of which is about 9 times higher than what is needed for its treatment. Nevertheless, wastewater treatment is still supplied with additional energy.

In terms of energy consumption, WWTPs often do not run in optimal mode. This can be improved by, for example, optimizing the consumption of individual electrical appliances, changing technology, recovering thermal energy by means of heat pumps, and increasing biogas production.

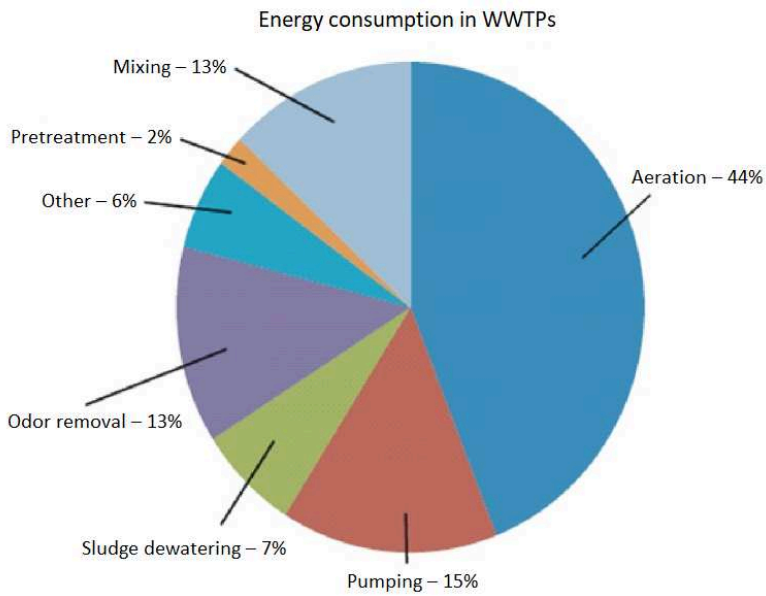

Fig. 6 Energy consumption of wastewater treatment in WWTPs [4]

Energy savings

Figure 6 shows an interesting graph of energy consumption in WWTPs. It does not provide a direct guide to energy savings, but it can certainly serve as a clear aid in thinking about them and thus reducing the costs of wastewater treatment. The largest portion of energy is consumed by the technological equipment. This is an area that cannot be improved by control.

The author sees some potential for savings in optimizing the consumption of electrical appliances by means of automatic regulation, e.g. making adjustments based on the density and amount of pumped liquids in individual parts of the "production process". Figure 5 shows that each inlet and outlet can be controlled according to the level of individual liquids, their density, and the time for which the motors must run. It will perhaps not bring significant savings immediately, but when continuous operation is considered, it might be a valuable improvement in the long run.

Figures 5 and 6 do not illustrate heat transfers. Each submersible pump is a heat source. Virtually all energy consumed, including any losses such as in electrical circuits or in mixing, is transferred in the form of heat into water and sludge. If this heat is not needed to accelerate the treatment process, it can be at least partly used for other purposes.

Thermal energy can be recovered from wastewater at the feeder, in the tanks, and at the WWTP discharge where it is most appropriate. A 1 °C decrease in water temperature at the discharge would save a considerable amount of electrical energy. It would be possible to reduce the temperature of the discharged water to ambient temperature if it is not freezing. Cooling water in WWTPs is also positive for the receiving waters into which the water is discharged after the treatment. Heat recovery can be performed by heat pumps, which is a common technology today.

Energy recovery from biomass

At present, excess sludge from WWTPs is still considered waste, although it is a very promising source of energy. It can be used as a fuel for drying sludge, where it can replace fossil fuels. The energy potential of sludge depends on its composition and moisture content. Studies show that the recovery of energy in this way can save 30–40% of the energy consumed. The energy potential of dried sludge is almost 13 MJ, making the it a very interesting energy source.

In agriculture where the usage of farmyard manure has dropped significantly, there is an attempt to replace the manure with other organic materials of similar properties and sludge from WWTPs offers certain benefits. Although there are also opposing views on the use of sludge, especially with regard to the content of certain elements and organic pollutants that might pose a risk, sludge is advantageous in terms of long-term effects on nutrient content and organic matter content in soil, humus production, and biochemical properties of soil.

Next paragraphs are based on some of the key opinions of Jindřich Černý from the Faculty of Agrobiology, Food and Natural Resources at the Czech University of Life Sciences (CULS). Sewage sludge is formed in wastewater treatment processes, mainly in mechanical (primary) and biological (secondary) wastewater treatment. The properties and composition of sludge depend on the components in wastewater and the sludge treatment methods before it is removed from the WWTP. Sludge from mechanical treatment (primary sludge) contains insoluble

substances occurring in raw wastewater. Most insoluble substances are inorganic in nature and they are removed from wastewater already during pretreatment (sand, gravel, etc.). Therefore, this type of sludge contains mainly organic matter. Sludge from biological treatment (secondary sludge) contains mainly excess biomass.

In biologically stabilized sludge, intensive biological processes causing sensory and hygienic problems should no longer occur. In anaerobic stabilization, biogas is produced similar to biogas production in agricultural biogas plants (Chudoba et al., 1991, Dohányos et al., 1998).

Biologically stabilized sludge is a liquid material with dry matter content up to 10%. For further processing, it must be dewatered to increase dry matter content to about 25–30%. Sludge dewatering takes place on filter presses, sieving presses, or centrifuges. Sludge with the required dry matter content is solid and can be used in agriculture. Interestingly, with regard to the above definition (suspension of insoluble matter in water), it is technically no longer sludge.

Stabilized dewatered sewage sludge is a suitable fertilizer for agricultural soil. Its fertilization effect lies in the content of organic matter, macro-elements (especially N and P), trace elements, and biologically active substances.

Incineration of sludge

Sludge can be incinerated only in large incinerators that meet the criteria set out in the Czech Republic. There is only a few of them and it would be advisable to improve this situation. An example is Japan, where sludge incineration methods are most developed. The largest incinerator can burn up to 300 tons of sludge per day. By incineration, the sludge volume can be reduced by as much as 90% and the remaining 10% can be deposited in a landfill or otherwise exploited. A highly developed new method is the process of incineration together with ash melting. The resulting cinders may be further used for the manufacture of building blocks or for the construction of roads. In cinders, heavy metals that are originally present in the sludge are rigidly bound. The advantages of burning sludge in cement kilns, which has also been developed in Japan, rest in saving coal or gas and destroying all toxic organic substances due to very high temperature in the combustion area making it almost no-waste technology.

Waste treatment by pyrolysis

Pyrolysis, together with incineration and gasification, is a process of thermochemical conversion. But these processes differ significantly in the oxygen content in the reaction environment.

Unlike gasification and incineration, pyrolysis is based on the decomposition of organic substances by the action of heat without oxygen. In this thermal decomposition, the stability of high-molecular compounds decreases, leading to their cleavage and release of low-molecular compounds. Essentially, during thermal decomposition, volatile combustible compounds are released from solid waste material, i.e. sludge from WWTPs.

Thermal decomposition of such materials in the pyrolytic process produces solid carbonization matter, also called pyrolytic coke, liquid matter, which is a condensate of gases with poly-carbon molecules, and a pyrolytic gas. These products of the pyrolysis technology

can be used as input raw materials for further processing, but above all for the production of thermal and electrical energy.

Test results confirmed that at a higher temperature in the retort, 600 °C or more, larger amount of gas and smaller amount of liquid is produced. The relative ratio of the output products depends not only on the amount of organic and inorganic matter, but also on the temperature and time of exposure to the temperature, i.e. the material dosing rates. Due to the wide range and large variety of waste materials, the conditions for the pyrolysis process must be adjusted to ensure the best use of input materials.

For example, rakings from WWTPs would have to be appropriately treated, dried, and grinded. Incineration of dried sludge produces enough heat for such treatment, and in addition, heat is produced also in gas burning units or by heat pumps from water in the tanks.

Still, it is quite likely that the pyrolysis of rakings would be less efficient in terms of energy, and therefore economically less profitable. Nevertheless, thermal treatment of rakings should be considered in terms of reducing the volume of material deposited in landfills and thus directly protecting the environment. In addition, the pyrolysis process is still improving and it can be expected to become economically viable in the near future. Selling pyrolytic oil and coke, electrical energy, and further utilization of waste heat may contribute to pyrolysis becoming a common part of waste processing in wastewater treatment.

CONCLUSION

Wastewater treatment is essential to protect the environment. The technology has been developed to a quite high level. The view adopted by the authors considering the whole process as a production logistics system can be an inspiration for finding opportunities for better utilization of the current automatic control options. With the revolutionary potential of Industry 4.0, these options might be based on the introduction of holons and multiagent systems into the production process to improve the economy of WWTPs. It should be noted that the Industry 4.0 principles and methods might be employed primarily in the management of the otherwise highly developed process of wastewater treatment.

When viewing the WWTP operation as a production process, as the authors intend, it might be summarized that water as a carrier is treated and returned to the environment while the “raw materials” it brings are processed into products that can be sold. The amount of thermal energy in the incoming water is about 9 times higher than the WWTP consumes and can thus be used, for example, for heating. Sand and gravel can be used in the construction industry. Stabilized sewage sludge with dry matter content about 25–30% is a suitable fertilizer for agriculture. Incineration of sludge produces heat and reduces the volume of waste to only 10% of the original volume. Resulting ash can be easily deposited. Sludge incineration combined with ash melting produces cinders that can be used to manufacture building blocks or to construct roads. Generated biogas is transformed into electrical and thermal energy in cogeneration units. Pyrolysis, i.e. thermal decomposition of rod screen rakings, produces pyrolytic coke that can be used as excellent sorbent, pyrolytic oil for further processing in the chemical industry, and pyrolytic gas also usable in the cogeneration units. Without too much exaggerating, everything that wastewater brings to the WWTP can be exploited. This not only prevents any harm to the environment, but to the contrary, it contributes to its improvement. This idea was the main reason of the authors to work on this topic.

REFERENCES

BINDZAR, J. a kol. *Základy úpravy a čištění vod*. Vyd. 1. Praha: VŠCHT, 2009. 251 s. ISBN 978-80-7080-729-3.

ČERNÝ, J. *Využití odpadů z ČOV jako zdroje organických látek a živin*. Praha: Fakulta Agrobiologie, Potraviny a přírodní zdroje, CULS, 2016. Dostupné z: https://biom.cz/cz/odborne-clanky/vyuziti-odpadu-z-cov-jako-zdroje-organickych-latek-a-zivin.
HLAVÍNEK, P., MIČÍN, J. a PRAX, P. *Stokování a čištění odpadních vod*. Vyd. 1. Brno: CERM, 2003. 283 s. Učební texty vysokých škol. ISBN 80-214-2535-0.

JIRMUS, V. *Energie odpadních vod z ČOV*. Brno: ASIO water treatment and processing, company information, 2016. Dostupné z: http://www.asio.cz/cz/energie-odpadnich-vod-z-cov.

JUREČKA, M. *Logistika odpadních vod města.* Přerov: Vysoká škola logistiky o.p.s., 2017. Diplomová práce. Vedoucí práce: prof. Ing. Vladimír Strakoš, DrCs.

KURA, O., SCHNEIDEROVÁ, J., VÁVRA, J. *Připravovaná termická likvidace čistírenských kalů z ČOV Brno.* Brno: Sovak, 2000, **11**. s. 16 – 17.

PROCHÁZKOVÁ, R. *Zvýšení efektivnosti čistírny odpadních vod*. Přerov: Vysoká škola logistiky o.p.s., 2017. Diplomová práce. Vedoucí práce: prof. Ing. Vladimír Strakoš, DrCs.

STRAKOŠ, V., KAVKA, L. a KOLOMAZNÍK, I. *Logistika a modelování potrubní dopravy*. Přerov: Vysoká škola logistiky o.p.s., 2012. ISBN 978-80-87179-28-4.

SYNAČKOVÁ, M. *Vodárenství a stokování*. Praha: Faculty of Environmental Sciences, CULS, 2004.

ŠTASTA, P. *Využití čistírenských kalů jako alternativního paliv.* Brno: VUT, 2009. Dizertační práce. Vedoucí práce: prof. Ing. PETR STEHLÍK, CSc.

VEVERKA, Z. Alternativní paliva v cementárnách. *Odpadové fórum*. 2004: **5**(10).

WHERTER, J., OGADA, T. *S*ewage Sludge Combustion. *Progress in Energy and Combustion Science*. 1999, **25**. s. 55 – 116.

Aquatech., www.aquatech.cz [online]. 2017 [cit. 2017-03-23]. Available from: http://www.aquatech.cz/cerpaci-stanice-1404041721.html.

Ekoprogres, www.ekoprogres.cz [online]. © 2017 [cit. 2017-05-03]. Available from: https://www.ekoprogres.cz/inpage/vyrobni-program

Fontanar, www.fontanar.cz [online]. © 2017 [cit. 2017-05-03]. Available from: http://www.fontanar.cz/mechanicke-predcisteni.php

Plastomont, www.plastomont.cz [online]. 2017 [cit 2017-03-24]. Available from: http://www.plastmont.cz/k-potrubi01a.html

Pyrolýza [online]. [cit. 2017-04-23]. Available from: http://oenergetice.cz/technologie/pyrolyza-princip-historie-a-soucasnost/

Spalovani kalu [online]. [cit. 2017-04-23]. Available from: http://biom.cz/cz/odborne-clanky/efektivni-vyuziti-a-likvidace-cistirenskych-kalu

Kaly z čistíren odpadních vod [online]. [cit. 2017-04-23]. Available from: https://ovak.cz/index.php?document=349&lang=1

THE PERFORMANCE OF FREIGHT AIR TRANSPORT

VÝKONY V NÁKLADNÍ LETECKÉ DOPRAVĚ

Juraj, Vagner, Ing., PhD.[6]

Letecká fakulta

Technická univerzita v Košiciach

e-mail: juraj.vagner@tuke.sk

Edina, Jenčová, Ing., PhD.[7]

Letecká fakulta

Technická univerzita v Košiciach

e-mail: edina.jencova@tuke.sk

Abstract

The aim of the paper is to describe the performance of freight air transport over the last reference period (approx. 3 years). It deals with freight operations in relation to the most important companies providing freight transport. The aim is to bring an overview of the most important airlines providing freight transport and the transport performance of the selected airlines providing freight transport. Also, in the contribution, we outline plans for the development of individual companies.

Abstrakt

Cílem příspěvku „Výkony v nákladní letecké dopravě" je přehledně popsat výkony v nákladní letecké dopravě v posledním sledovaném období (cca 3 roky). Zabývá se činností nákladní letecké dopravy v souvislosti s nejvýznamnějšími společnostmi poskytujícími daný typ přepravy nákladu. Záměrem je přiblížit přehled o nejvýznamnějších leteckých společnostech poskytujících nákladní leteckou dopravu a přiblížit přepravní výkony v těchto vybraných nákladních leteckých společnostech. Taktéž v příspěvku jsou načrtnuté připravované plány rozvoje jednotlivých společností.

Key words

Air Freight, FedEx, United Parcel Service, Emirates SkyCargo

Klíčová slova

Nákladní letecká doprava, FedEx, United Parcel Service, Emirates SkyCargo

INTRODUCTION

Even before the mail was transported by airplanes, it was transported by airships, balloons and mail pigeons. The first load was transported on 7th November 1910, when several kilograms of silk was transported by air from Dayton to Columbus, Ohio. In Germany, the first official air mail was recorded in 1912. However, it was not until 1925 that a comprehensive air

[6] Odborný asistent, Katedra letovej prípravy, Letecká fakulta, Technická univerzita v Košiciach

[7] Odborná asistentka, Katedra manažmentu leteckej prevádzky, Letecká fakulta, Technická univerzita v Košiciach

service was available in the US from the 7th October 1925 in the first five CAM contracts, the routes were announced by the U.S. Postal Service, which defined the flight between designated points. For example, CAM 1 flew from New York to Boston along the track and was run by Juan Tripp, who later founded Pan American Airways. In 1931, 85% of the airlines' revenues came from the transport of postal items, 14.8% from passenger traffic and only 0.2% from freight.

The Second World War caused the rapid development of the aviation industry and, for the first time, large-scale transport to support the war effort. For example, in support of nationalist China, more than 650,000 tons of cargo were transported through The Hump between India and South China in 1942 and 1945. Later in 1948 and 1949, the largest aviation support in history occurred during the blockade of Berlin. [1]

In the early 1970s, express parcels began to be delivered. Adrian Dalsey, Larry Hillblom and Robert Lynn founded DHL in 1969, and Fred Smith founded the Federal Express in 1971. [1]

The era of wide-body aircraft began in 1970 when the first Boeing 747 entered service. This was the first time in history when the aviation industry had chosen the size before the speed to increase performance. Shortly thereafter, Douglas and Lockheed began to produce three-engine, wide-body aircraft such as Douglas DC-10 and Lockheed L-1011. In the beginning, the market was accessible only to passengers through these new aircraft until Lufthansa used the Boeing 747 to carry goods in April 1972 between Frankfurt and New York. The entire consignment weighed incredible 73 tons. [2]

By 2012, over 1738 cargo planes were operated around the world. Thirty-seven percent of these were wide-body aircraft (> 80 tonnes), 36% were mid-range body aircraft (40 to 80 tonnes) and 27% were standard (narrow-body) aircraft with a capacity of less than 45 tonnes. Boeing predicts that demand for freight aircraft will increase to nearly 3,200 aircraft by 2031.

1 CHARACTERISTICS OF AIR FREIGHT TRANSPORT

Air freight transport means the transfer and transport of goods by an air carrier, which may be charter or commercial. What is air cargo? Specifically, what types of goods are more likely to be transported by aircraft instead of a much cheaper land transport. In 2012, revenue from goods transport accounts for around 15% of total air traffic revenues. Air Freight represents approximately 1.5% of the total weight transported worldwide, but 30% of the transported value. These statistics show that, above all, the greatest advantage of air transport is its speed. It is the fastest way of transport and also the most advantageous, where time is an important factor, high value goods are transported by air, and goods of relatively low value are transported by lorry, train or ship. [2]

The greatest advantage of air transport is its speed. It is the fastest mode of transport and also the most advantageous where time is an important factor. It provides regular, convenient, efficient, and fast service. Unlike rail or road, there is no need to spend money on the construction of any lines or roads. Aircraft can get to any location without any natural barriers or other barriers. Because classical formalities are made very quickly. This avoids delays in getting permissions.

The disadvantage of freight air transport that it is the most expensive mean of transport. Travel expenses are so high that it's out of the reach of an ordinary person. Air transport is uncertain and unreliable due to climatic conditions. Adverse weather, for example due to fog, snow or heavy rain, etc. may result in the cancellation of scheduled flights and the cessation of

air traffic. The chance of disturbances and accidents is high compared to other modes of transport. For this reason, this means a relatively higher risk. Air transport requires special professional qualifications and a high level of training for its operation. Air transport is inappropriate for the transportation of cheap, bulky and heavy goods due to limited capacity and high costs.

2 GLOBAL PERFORMANCE IN FREIGHT AIR TRANSPORT BETWEEN 2015 AND 2016

Worldwide freight transport increased by + 2.2% year on year in 2015, less than half of the growth registered in 2014 (+ 4.9%), reflecting so the stagnant development of world trade. All major areas show weak performance in 2015. In the Middle East, on the contrary, it shows strong growth, which to some extent compensates for weakness in other regions. The international freight transport segment, accounting for almost 87% of total freight traffic, grew by approximately + 2.9% after recording growth of + 5.2% in 2014. The poor demand for air freight has resulted in a drop in the freight load factor from approx. 50% in 2014 to 47% in 2015. It was found that air carriers would improve their freight capacity by moving more freight by means of a transport aircraft, rather than by using exclusively freight aircraft.

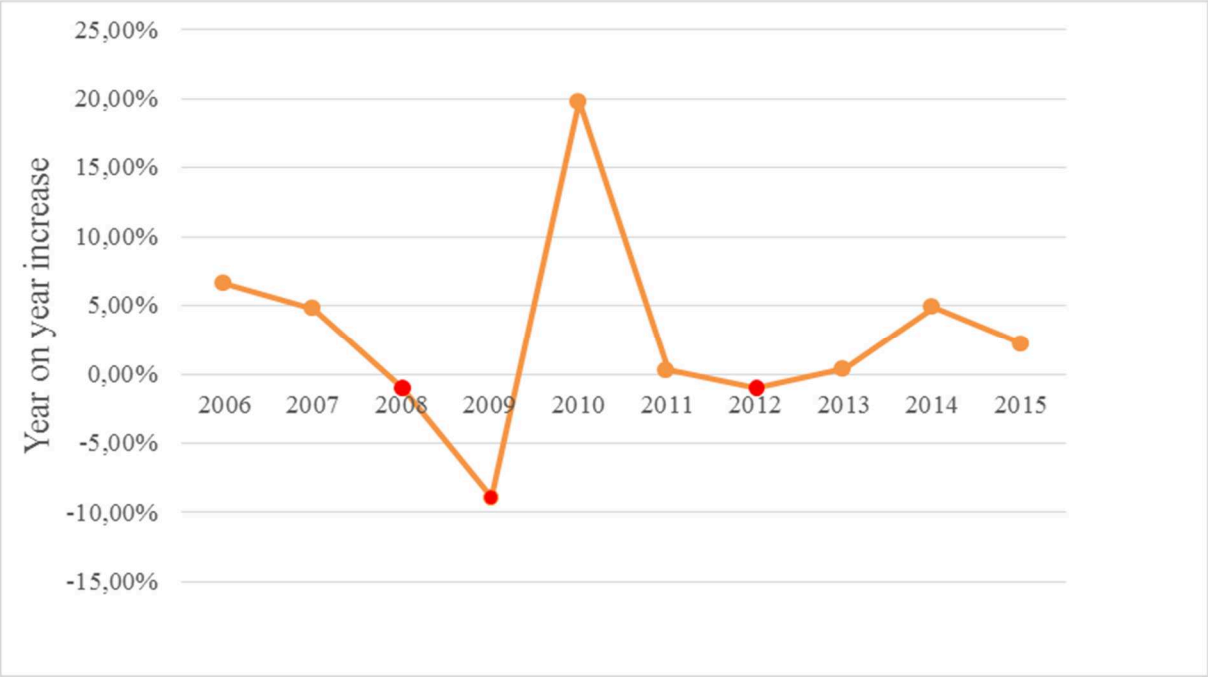

Fig. 1 Year on year increase of freight air transport 2006-2015
Source: ICAO. Yearly Monitor 2015. Available on: https://www.icao.int/sustainability/ Documents/Yearly%20Monitor/yearly_monitor_ 2015.pdf

With regard to freight transport, the top 15 airports reported year on year increase of + 1.1% in 2015. During the year, aviation markets in all regions were fragile, with the exception of the Middle East. Hong Kong ranked first with an increase of + 0.1%. Dubai increased significantly by + 4.5%, due to the expansion of the network to the Middle East. [3]

Tab. 1 TOP 15 airports ranked according to freight volume in tonnes for 2015

Airport	Freight		Year on year increase
Hong Kong, CN (HKG)	4,379,762	↑	0.1%
Memphis TN, US (MEM)	4,289,377	↑	0,9%
Shanghai, CN (PVG)	3,178,985	↑	2,5%
Anchorage AK, US (ANC)	2,624,312	↑	5,3%
Dubai, AE (DXB)	2,505,507	↑	4,5%
Incheon, KR (ICN)	2,489,662	↑	0,6%
Louisville KY, US (SDF)	2,262,650	↑	1,9%
Tokyo, JP (NRT)	2,085,275	↓	-0,6%
Taipei, CN (TPE)	2,008,703	↓	-3,1%
Frankfurt, DE (FRA)	1,993,467	↓	-2,8%
Miami FL, US (MIA)	1,970,616	↓	-0,1%
Beijing, CN (PEK)	1,889,830	↑	2,7%
Paris, FR (CDG)	1,861,197	↓	-1,4%
Singapore, SG (SIN)	1,853,000	↑	0,5%
Los Angeles CA, US (LAX)	1,846,010	↑	5,7%

Source: ICAO. Yearly Monitor 2015. Available on: https://www.icao.int/sustainability/ Documents/Yearly%20Monitor/yearly_monitor_ 2015.pdf

The global air freight increased by + 2.6% year on year in 2016, which means a slight improvement in growth of + 1.7% compared to 2015. All main areas have shown improvement in growth, with the exception of the Middle East, which showed a slowdown. Europe has made the greatest improvements and also recorded the strongest growth. Latin America / Caribbean experienced the weakest performance and it is the only region where there has been a decline in freight transport. The international freight transport segment, accounting for almost 87% of total freight traffic, grew by about + 2,5% after recording growth of + 1,8% in 2015. Freight traffic grew from around 47% in 2015 to 46% in 2016.

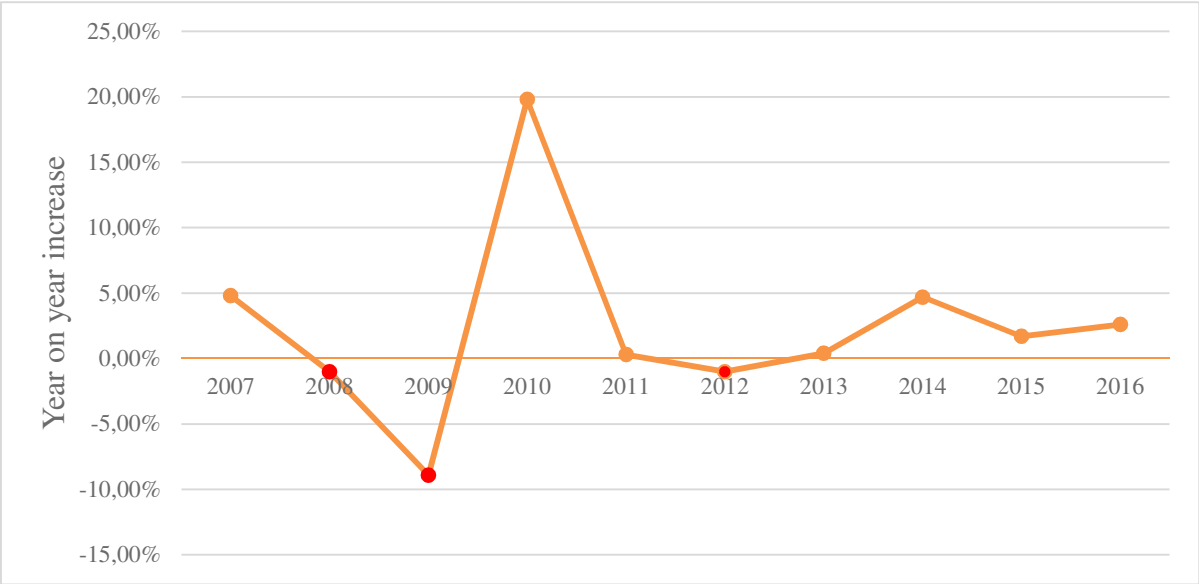

Fig. 2 Year on year increase of freight air transport 2007-2016
Source: ICAO. Yearly Monitor 2016. Available on: http://www.icao.int/sustainability/ Documents/Yearly%20Monitor/YearlyMonitor2016.pdf

With regard to freight transport, the top 15 airports reported a year on year increase of + 2.5% in 2016. Air freight has improved in the second half of the year in all regions. Hong Kong remains the first with an increase of + 3.2%. The largest increase was recorded in Asia / Pacific. Singapore and Shanghai achieved the highest growth, + 6.3% and + 5.4%. [4]

Tab. 2 TOP 15 airports ranked according to freight volume in tonnes for 2016

Airports	Freight		Year on year increase
Hong Kong, CN (HKG)	4,521,520	↑	3,2%
Memphis TN, US (MEM)	4,312,884	↑	0,6%
Shanghai, CN (PVG)	3,352,002	↑	5,4%
Incheon, KR (ICN)	2,602,679	↑	4,5%
Dubai, AE (DXB)	2,592,454	↑	4,5%
Anchorage AK, US (ANC)	2,542,526	↓	-3,4%
Louisville KY, US (SDF)	2,340,553	↑	3,4%
Tokyo, JP (NRT)	2,130,848	↑	2,2%
Taipei, CN (TPE)	2,081,043	↑	3,8%
Frankfurt, DE (FRA)	2,029,058	↑	1,8%
Miami FL, US (MIA)	1,977,881	↑	0,4%
Singapore, SG (SIN)	1,969,400	↑	6,3%
Paris, FR (CDG)	1,952,935	↑	2,7%
Beijing, CN (PEK)	1,928,179	↑	2,0%
Los Angeles CA, US (LAX)	1,903,155	↑	2,8%

Source: ICAO. Yearly Monitor 2016. Available on: https://www.icao.int/sustainability/Documents/Yearly%20Monitor/yearly_monitor_ 2016.pdf

3 PERFORMANCES IN FREIGHT AIR TRANSPORT FROM THE CARRIERS POINT OF VIEW

FEDEX

The profit-raising initiatives have been successful and are planning to continue expanding their range. For example, they are replacing each aircraft by the new Boeing 767-300F, what adds millions of dollars a year to profits because new aircraft use 30% less fuel, are more reliable and require less maintenance costs than older aircraft that are being replaced.

FedEx Express offers a wide range of American domestic and international parcel and cargo delivery services, including service priorities that provide one, two or three working days delivery times worldwide. The following table (Table 3) compares sales, operating costs for 2014, 2015, and 2016 (in millions of dollars). FedEx creates excellent financial returns to its shareholders by providing logistics with high added value, shipping and related services to traders through targeted operating companies. Customer requirements will be met in the highest quality in a way that matches each market segment. FedEx will seek to develop mutually enriching relationships with its employees, partners and suppliers. Security will be the first in all activities. [5]

Tab. 3 Revenues and operating expenses of FedEx Express

	2016	2015	2014
Total revenue for transportation	21,068	21,633	21,505
Salaries and employee benefits	10,240	10,104	9,797
Rents and landing charges	1,688	1,693	1,705
Fuel	2,023	3,199	3,943
Maintenance and repairs	1,294	1,357	1,182
Operating revenues	2,519	1,584	1,428

Source: FedEx Annual Reports. Available on: http://investors.fedex.com/financial-information /annual-reports

EMIRATES SKYCARGO

Emirates SkyCargo has maintained its position as the world's largest international freight airline company focused on tonne-kilometre freight (FTKM) with the use of main deck and second deck capacities. In the 2015-2016 economic year, Emirates SkyCargo recorded revenue of $ 11.1 billion AED ($ 3.0 billion), a 9% decrease over the previous year. Emirates SkyCargo accounted for 14% of total air travel revenues and continues to play an important role in the expanding activities of the company. In the years 2015-2016 it transported 2.5 million tonnes of freight, what means an increase of 6% of the volume transported in the previous year. This was a significant result in the air freight sector, which was stagnant due to the slow global economy. They also launched new cargo flights to cities like Ho Chi Minh City, Vietnam; Ahmedabad, India; Columbus, USA; Algiers, Algeria; and Ciudad Del Este, Paraguay, and increased freight flights to Mexico City in Mexico. During the year 2016, its costly terminal for cargo operations at Al Maktoum International Airport (DWC), was officially introduced. The purpose-built device strengthens Dubai's position as a global air freight and logistics center, with the latest infrastructure to support current and future growth. The efficiency of Emirates SkyCentral's logistics solutions has enabled the transport of nearly 45,000 tons of Cool Chain products, which together with the cover provides several hours of sun protection and the harmful effects of heat to facilitate the transport of refrigerated cargo.

UNITED PARCEL SERVICE

The results of 2016 show that UPS is well adapted to many changes in the world economy, including double-digit growth in e-commerce. Looking back to the year: UPS delivered an average of about 19 million packages per day. This higher volume resulted in an increase in consolidated sales of 4.4% to almost $ 61 billion. Even though they invest, they continue to produce strong results that drive UPS to growth profit. For the whole year, earnings increased by almost 6% to $ 5.75, which also meant a record rise. These strong results were partly due to their international business segment, which generated more than 13% growth in operating revenues for shipments of 4.4%. Funding from the company's operations is estimated at 6.5 billion dollars, allowing them to increase dividends by about 7% in 2016. The US domestic segment recorded a solid revenue growth of 4.2% compared to the previous year. The international business segment has grown significantly in 2016. Revenues increased to $ 12.4 billion. Export growth by 5.1% was the primary contributor to an increase in international daily transport of 4.4%. Total operating profit grew to $ 2.5 billion, what means an increase of 13.2%.

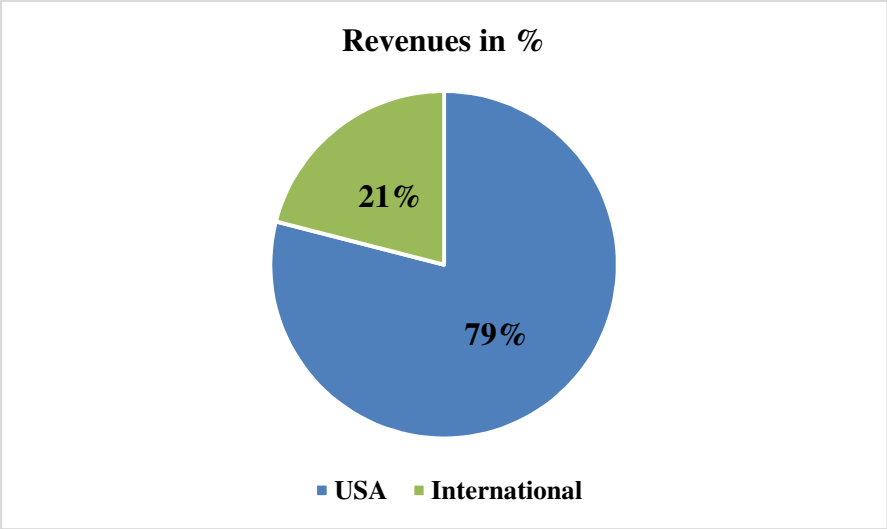

Fig. 3 Ratio of revenues by regions
Source: UPS Investors. Annual Reports. Available on: http://www.investors.ups.com/phoenix.zhtml?c=62900&p=irol-reportsannual

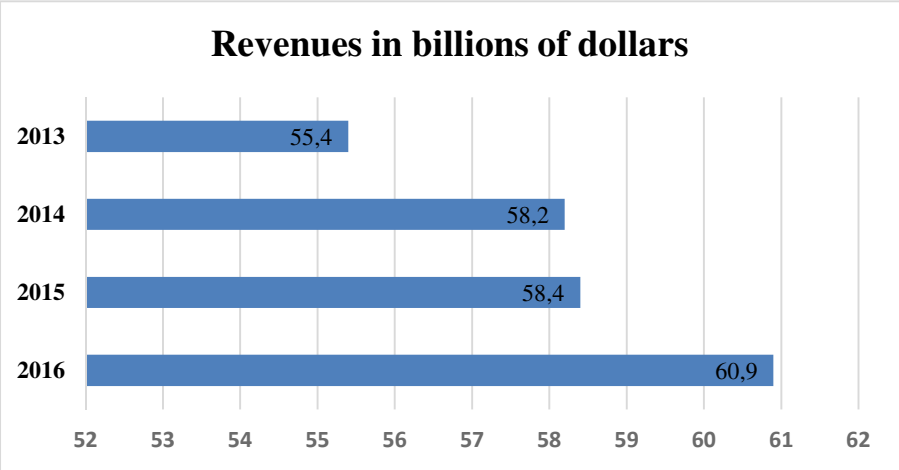

Fig. 4 Comparison of Revenues for 2013-2016
Source: UPS Investors. Annual Reports. Available on: http://www.investors.ups.com/phoenix.zhtml?c=62900&p=irol-reportsannual

In support of the growth they are experiencing in international commerce, they accelerate the automation of their devices. They update and replace some of the older devices by building new, flexible and highly automated transfer hubs that provide greater speed, flexibility and productivity. UPS boasts great pride in transferring technology from one part of the integrated network to another. Looking at the future, new, highly automated transfer hubs will be integrated into their network planning technology. This will enable UPS to expand, connect and optimize the flow of packages in all parts of the network in the same way as ORION was enabling to optimize drivers' routes. They can redirect the volume of packages between the hubs in a way that reduces costs, increases productivity, and responds to unexpected overheads while improving service levels. UPS is making investments to increase the efficiency, capacity and profitability of its global integrated network. They think of it as the next generation of UPS.

CONCLUSION

The aim of the contribution was to highlight the position and the importance of air freight transport. In recent years, air transport has experienced the largest boom in the Middle East, which to some extent compensates for the stagnant development of world trade. It was also found that air carriers would improve their freight capacities by transporting more freight by means of a transport aircraft, rather than by using only freight aircraft. Federal Express is known for its night transport services but also for a breakthrough system that tracks packages and provides real-time tracking of shipments.

In 2013, FedEx had an active fleet of 660 aircraft with 3.6 million shipments delivered each day. Emirates SkyCargo is known for the highest standards of product quality in support of business logistics to achieve customer satisfaction. In 2016, it was named the best airline in the world for the twelfth consecutive year. The Emirates fleet comprises 255 aircraft, including 15 freight aircraft. United Parcel Service is the world's largest shipping company and leading supplier of specialized transportation and logistics services. Every day they run the flow of goods, money and information in over 200 countries and territories around the world. UPS had an active fleet of 236 aircraft by 2016.

Based on the performance of other cargo airlines, Federal Express will generate excellent financial returns to its shareholders, replacing each aircraft with the new Boeing 767-300F due to lower fuel consumption by 30% and saving the environment. Emirates has so far achieved the highest profit, more than 50% over the past year, which demonstrates the success of business models and strategies. United Parcel Service implements investments to increase the efficiency, capacity and profitability of its global integrated network.

REFERENCE

[1] Tom, G. *Air Cargo Guide*. ACI-NA Air Cargo Committee. 2013. Dostupné na internete: http://www.aci-na.org/content/air-cargo-guide.

[2] Boeing World Air Cargo Forecast Team, *World Air Cargo Forecast 2012 - 2013*. Seattle. Boeing Commercial Airplanes. 2012. Dostupné na internete: http://www.boeing.com/commercial/cargo

[3] ICAO: *Air transport Yearly Monitor*. 2015. Dostupné na internete: http://www.icao.int/sustainability/Documents/Yearly%20Monitor/yearly_monitor2015.pdf

[4] ICAO: *Air transport Yearly Monitor*. 2016. Dostupné na internete: http://www.icao.int/sustainability/Documents/Yearly%20Monitor/YearlyMonitor2016.pdf

[5] FedEx Express, 1995 – 2017. Dostupné na internete: http://www.fedex.com/ne/about/company-info/40th-anniversary.html#tab2